05/06/99

TIP PROJECT: W-5813G

CONTRACT: DM00332

See Sheet 1A For Index of Sheets

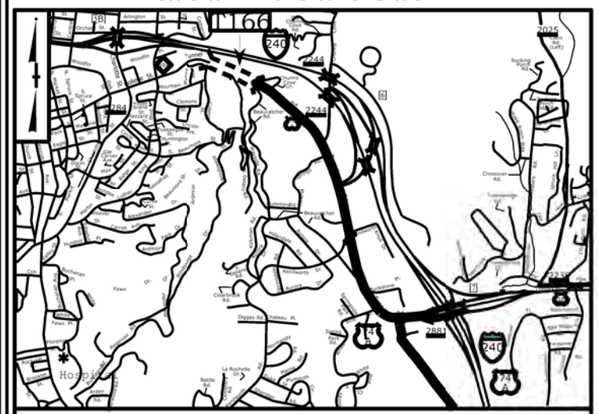


VICINITY MAP N.T.S

STATE OF NORTH CAROLINA
DIVISION OF HIGHWAYS

# BUNCOMBE

| STATE | STATE PROJECT REFERENCE NO. | SHEET NO. | TOTAL SHEETS |
|---|---|---|---|
| N.C. | W-5813G | 1 | |

| STATE PROJ. NO. | F.A. PROJ. NO. | DESCRIPTION |
|---|---|---|
| 48958.3.8 | 0070237 | CONST. |

*LOCATION: US-70/74/74A (TUNNEL/S. TUNNEL RD)*
*FROM TUNNEL 166 TO SOUTH MALL ENTRANCE*

*TYPE OF WORK: INSTALLATION OF PEDESTRIAN SIGNALS,*
*SIDEWALK, RAMPS, AND HIGH VISIBILITY CROSSWALKS*

**INCOMPLETE PLANS**
DO NOT USE FOR R/W ACQUISITION

DOCUMENT NOT CONSIDERED FINAL
UNLESS ALL SIGNATURES COMPLETED

GRAPHIC SCALES

20 10 0 20 40
PLANS

EFF. 01-16-2018
REV.

2018 ROADWAY ENGLISH STANDARD DRAWINGS

The following Roadway Standards as appear in "Roadway Standard Drawings" Highway Design Branch - N. C. Department of Transportation - Raleigh, N. C., Dated January, 2018 are applicable to this project and by reference hereby are considered a part of these plans:

| STD.NO. | TITLE |
|---|---|
| DIVISION 6 - ASPHALT PAVEMENTS | |
| 654.01 | Pavement Repairs - For Superpave Mix Types |
| DIVISION 8 - INCIDENTALS | |
| 848.05 | Curb Ramp - Proposed Curb and Gutter |
| 848.06 | Curb Ramp - Existing Curb and Gutter |
| DIVISION 12 - PAVEMENT MARKINGS, MARKERS, AND DELINEATION | |
| 1205.01 | Pavement Markings - Line Types and Offsets |
| 1205.04 | Pavement Markings - Intersections |
| 1205.07 | Pavement Markings - Pedestrian Crosswalks |

Prepared in the Office of:
DIVISION OF HIGHWAYS
55 Orange St., Asheville NC, 28801

2018 STANDARD SPECIFICATIONS

RIGHT OF WAY DATE:

LETTING DATE:
NOVEMBER 16, 2022

PROJECT ENGINEER

PROJECT DESIGN ENGINEER

STATE OF NORTH CAROLINA DEPARTMENT OF TRANSPORTATION

| PROJECT REFERENCE NO. | SHEET NO. |
|---|---|
| W-5813G | 2A |
| R/W SHEET NO. | |
| ROADWAY DESIGN ENGINEER | HYDRAULICS ENGINEER |

**DOCUMENT NOT CONSIDERED FINAL UNLESS ALL SIGNATURES COMPLETED**

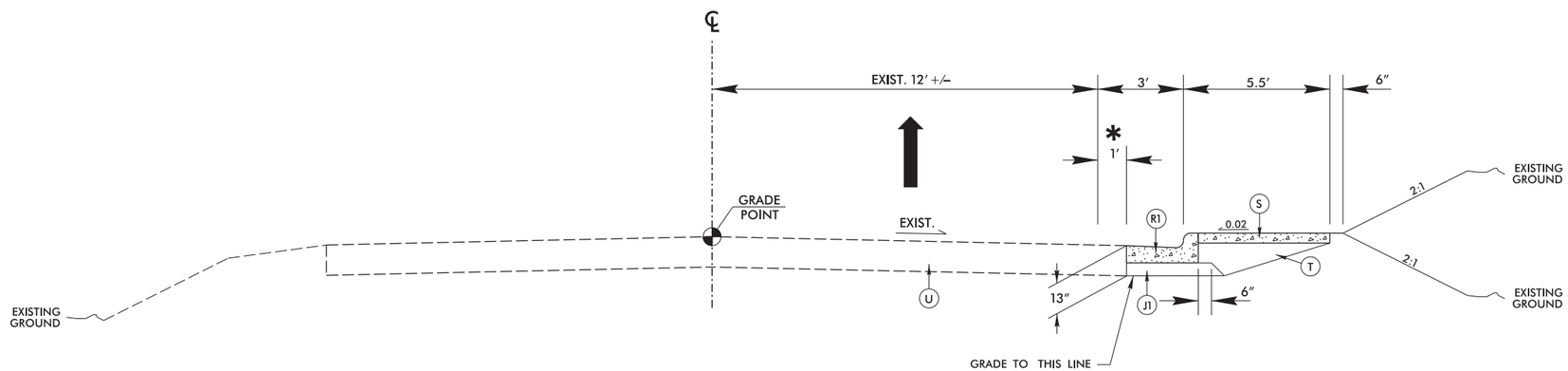


## TYPICAL SECTION FOR SITE #1

*NOTE: INSTALL 2′–6″ CONC. CURB AND GUTTER 1′ FROM EOT OR AS DIRECT BY THE ENGINEER

| | |
|---|---|
| J1 | 6″ AGGREGATE BASE COARSE |
| R1 | 2′–6″ CONCRETE CURB AND GUTTER |
| S | 5′ CONCRETE SIDEWALK |
| T | EARTH MATERIAL |
| U | EXISTING PAVEMENT |

REVISIONS

8/17/99

22-MAR-2022 14:21
S:\Engineering\W-5813G\Roadway\Proj\W-5813G_ddc_typ.dgn
$$$$USERNAME$$$$

| PROJECT REFERENCE NO. | SHEET NO. |
|---|---|
| W-5813G | 2B |

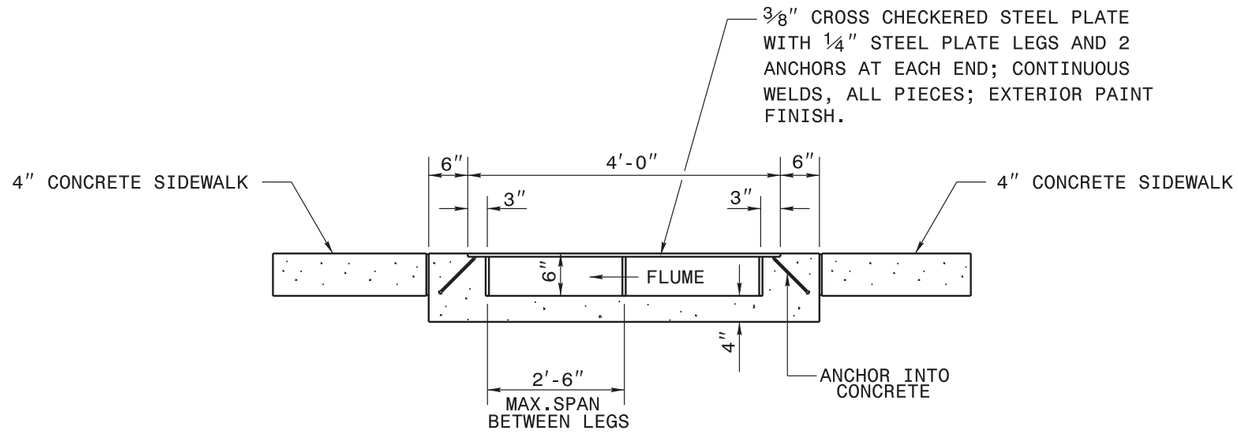


FLUME SECTION VIEW

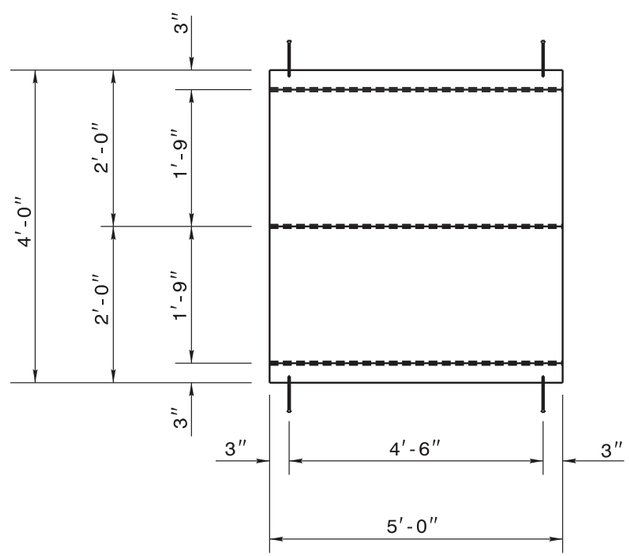


STEEL FLUME PLATE

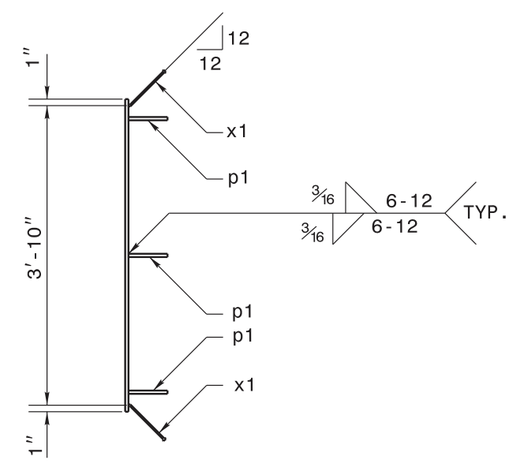


PLATE SECTION VIEW

| MARK | QTY | DESCRIPTION | LENGTH | GRADE | ROUTING CODE |
|---|---|---|---|---|---|
| | | | | | |
| 1P1 | 1 | CP 3/8 x 48 | 5'-0" | A786 | F |
| p1 | 3 | PL 1/4 x 6 | 5'-0" | A36 | |
| x1 | 4 | 1/2 WS | 0'-6 1/8" | A108 | |
| | | | | | |


CONTRACT STANDARDS AND DEVELOPMENT UNIT
Office 919-707-6900 FAX 919-250-4119


# STEEL FLUME PLATE DETAIL

ORIGINAL BY: _____ DATE: _____
MODIFIED BY: rtritt DATE: 12/1/17
CHECKED BY: _____ DATE: _____
FILE SPEC.: Dist2/Contracts/DM00236/Special Details


05-DEC-2017 10:28
S:\DTS\Staff Engineer\Projects\Fairview\steel flume plate modified.dgn
$$$$USERNAME$$$$

| PROJECT REFERENCE NO. | SHEET NO. |
|---|---|
| W-5813G | 2C |

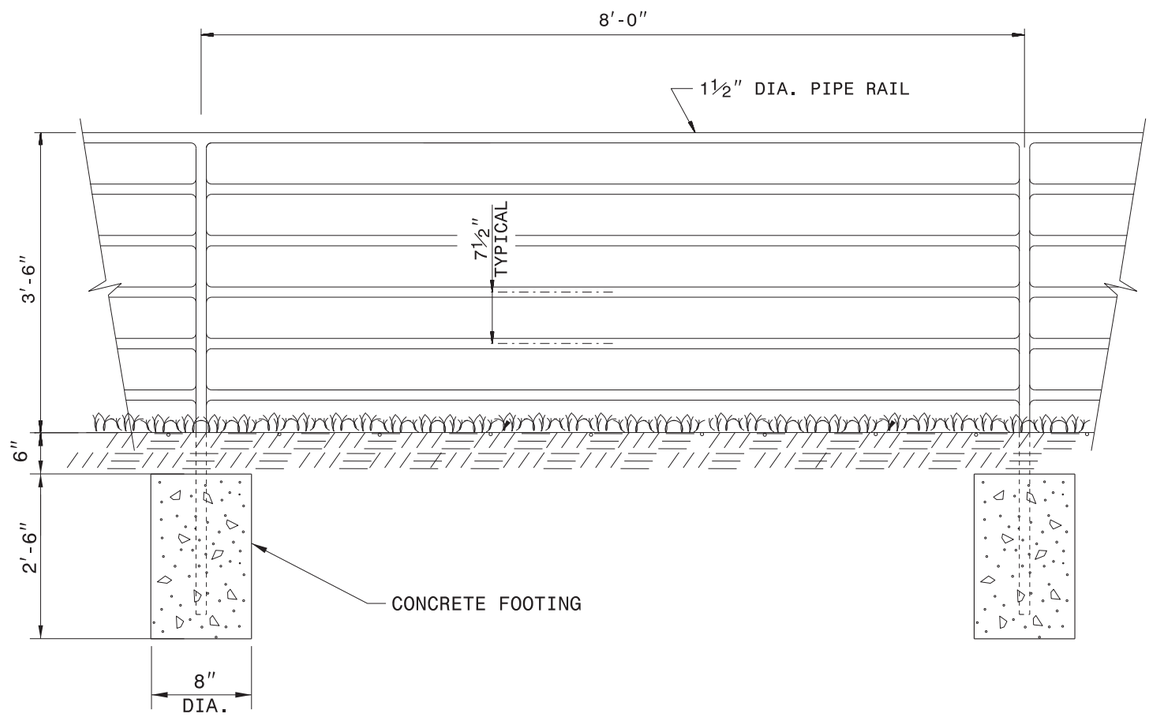


## ELEVATION OF HANDRAIL

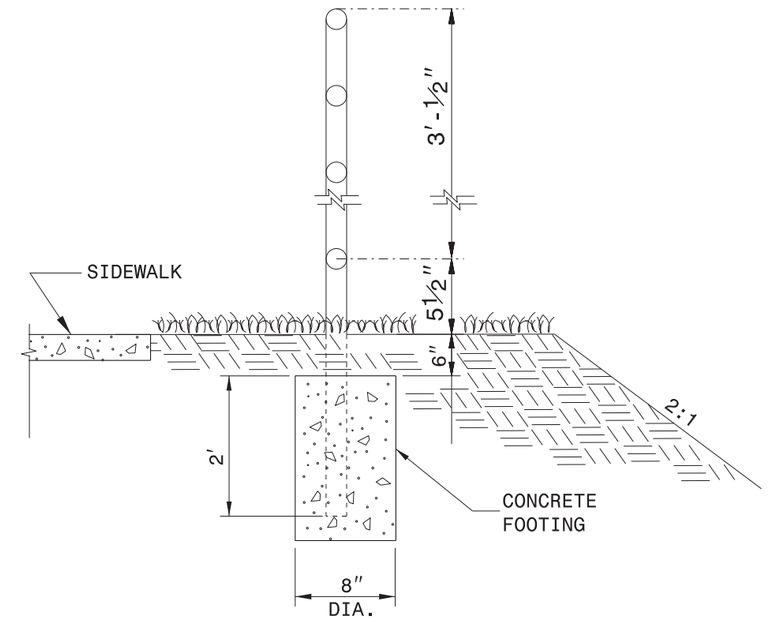


## INSET 'A'

NOTES:

CONSTRUCT PROPOSED STEEL PIPE RAIL OF 1½" DIAMETER SCHEDULE 40 PLAIN END GALVANIZED STEEL PIPE MEETING THE REQUIREMENTS OF ASTM A53.

REPAIR GALVANIZING IN ACCORDANCE WITH SECTION 1076 OF THE NCDOT STANDARD SPECIFICATIONS.

PAINT, IF REQUIRED BY THE ENGINEER, IN ACCORDANCE WITH SECTION 1080 OF THE STANDARD SPECIFICATIONS.

WELD IN ACCORDANCE WITH ARTICLE 1072-18 OF THE STANDARD SPECIFICATIONS.

USE CLASS 'B' CONCRETE FOR HANDRAIL FOOTINGS.

PLACEMENT OF HANDRAIL IN RELATION TO SHOULDER BREAK POINT AND SIDEWALK MAY BE MODIFIED AS DIRECTED BY THE ENGINEER.


**CONTRACT STANDARDS AND DEVELOPMENT UNIT**
Office 919-707-6950 FAX 919-250-4119


# PROPOSED PEDESTRIAN SAFETY RAIL

ORIGINAL BY: E.E. WARD DATE: 12-99
MODIFIED BY: DATE:
CHECKED BY: DATE:
FILE SPEC.: jhowerton/handrail on retaining wall.dgn


$$$$$$SYSTIME$$$$$$
$$$$$$$$$$$$$$$$DGN$$$$$$$$$$$$$$$$$$$$
$$$$$$USERNAME$$$$

| PROJECT REFERENCE NO. | SHEET NO. |
|---|---|
| W-5813G | 2D |

PAY LIMITS FOR CURB RAMP

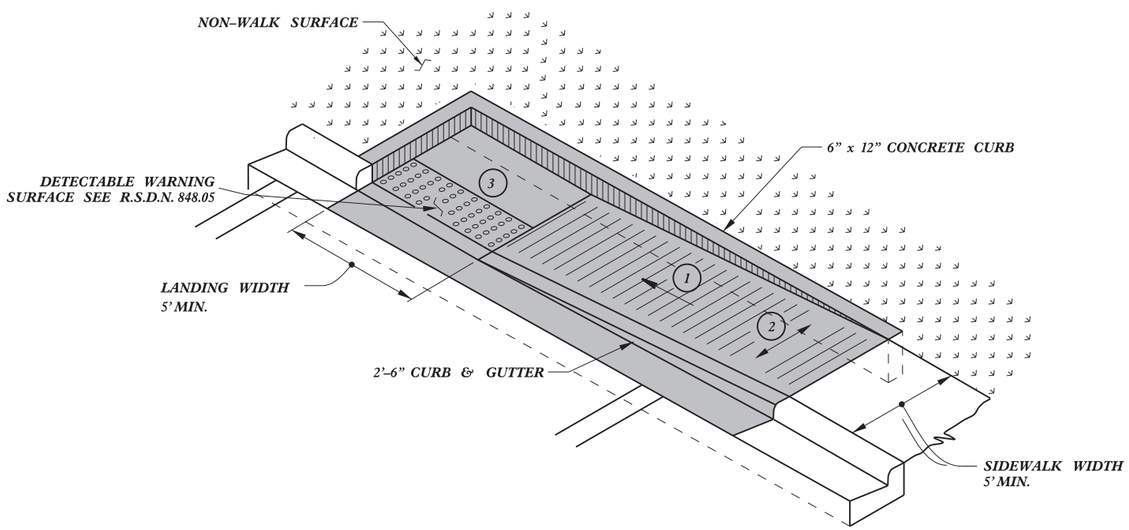


TYPE 1A

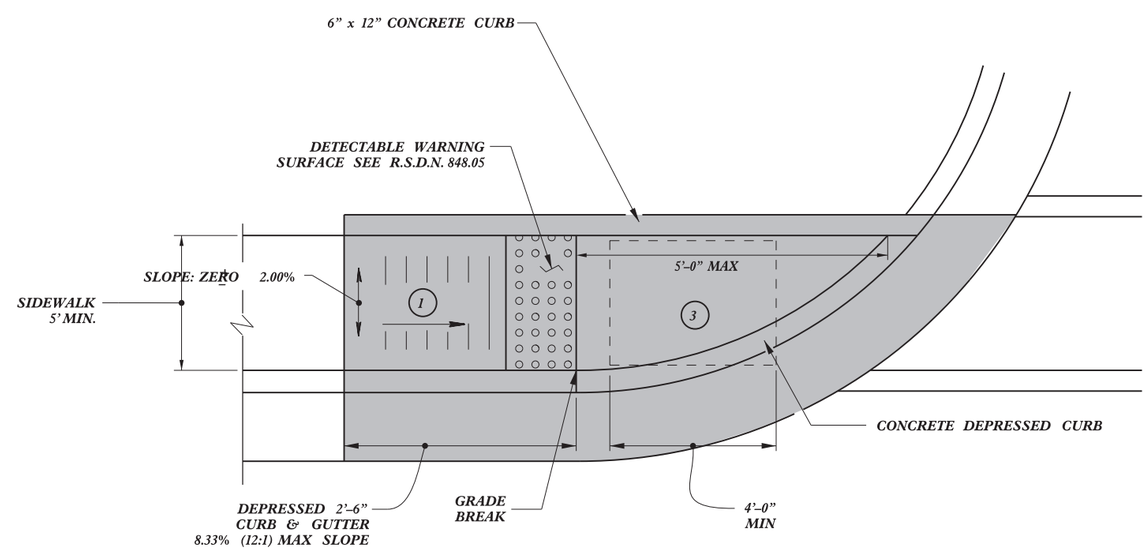


TYPE 1

1. 8.33% (12:1) MAX RAMP SLOPE
2. CROSS SLOPE: 2.00%
3. CURB RAMPS REQUIRE A (4'-0") MINIMUM LANDING WITH A MAXIMUM CROSS SLOPE AND LONGITUDINAL SLOPE OF 2.00% WHERE PEDESTRIANS PERFORM TURNING MANEUVERS. SLOPE TO DRAIN TO CURB.

REFER TO ROADWAY STANDARD DRAWING NUMBER 848.05 SHEET 3 OF 3 FOR ALL RAMP NOTES


CONTRACT STANDARDS AND DEVELOPMENT UNIT
Office 919-707-6950 FAX 919-250-4119


# CURB RAMPS

Directional Ramps

ORIGINAL BY: J.S. HOWERTON DATE: 7/7/11
MODIFIED BY: DATE:
CHECKED BY: DATE:
FILE SPEC.: stds/2012CurbRamp/CurbRampDetails.dgn


5/14/99
22-MAR-2012 15:06
S:\Contracts\Special Details\jhowerton\Standard Drawings\2012 Standard Drawings\2012 Curb Ramp Special Details\Curb Ramp Details.dgn
jhowerton AT CSD23760

| PROJECT REFERENCE NO. | SHEET NO. |
|---|---|
| W-5813G | 2E |

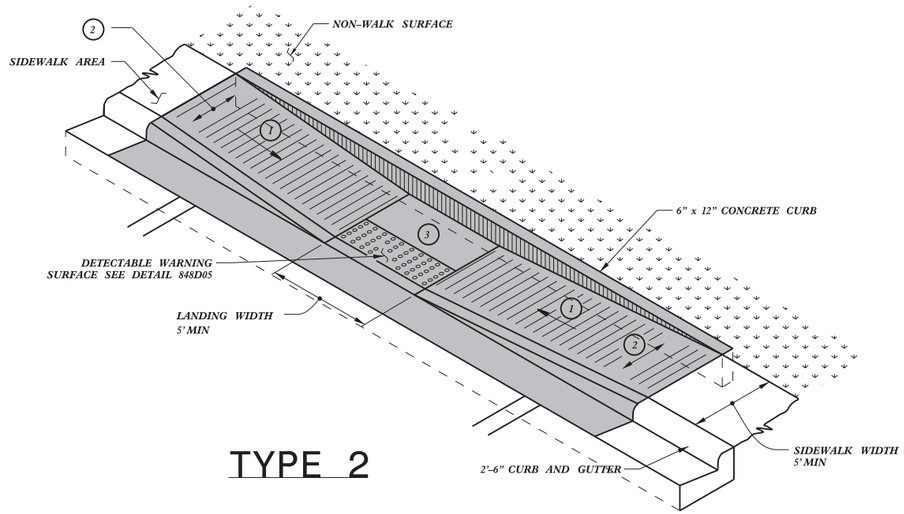


TYPE 2

PAY LIMITS FOR CURB RAMP

1. 8.33% (12:1) MAX RAMP SLOPE
2. CROSS SLOPE: 2.00%
3. CURB RAMPS REQUIRE A (4'-0") MINIMUM LANDING WITH A MAXIMUM CROSS SLOPE AND LONGITUDINAL SLOPE OF 2.00% WHERE PEDESTRIANS PERFORM TURNING MANEUVERS. SLOPE TO DRAIN TO CURB.

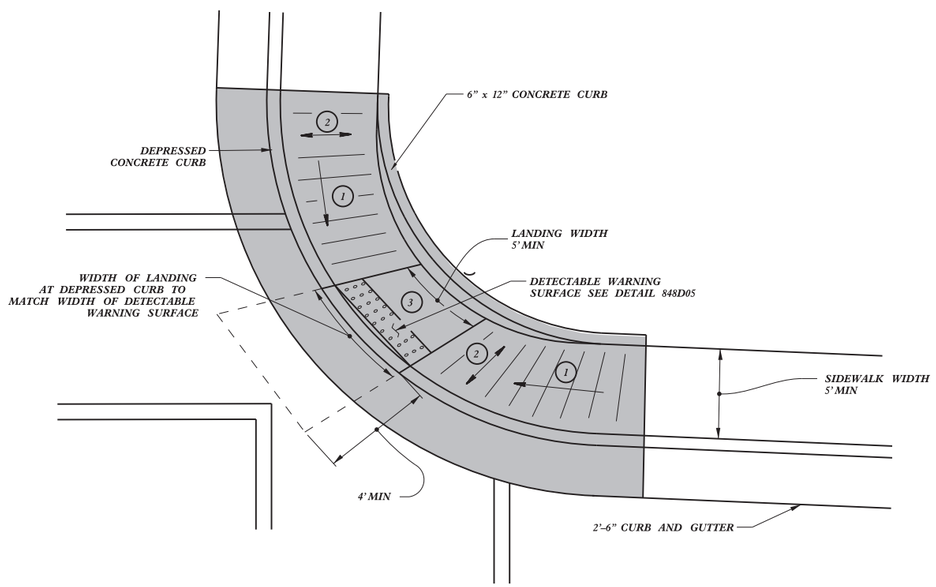


TYPE 2A

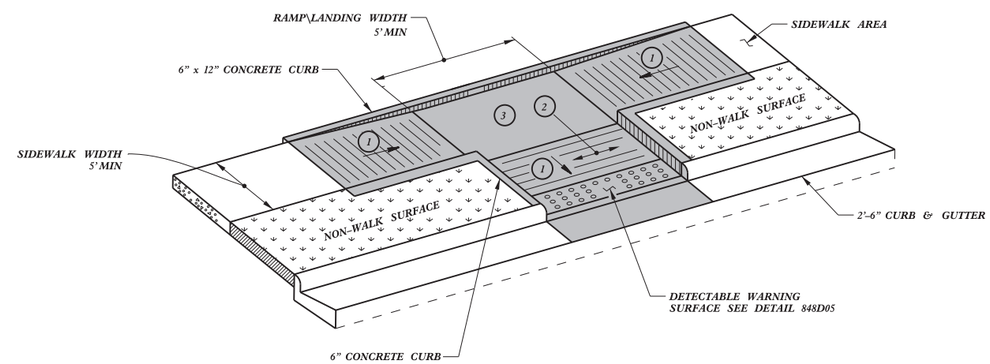


TYPE 3

REFER TO ROADWAY STANDARD DRAWING NUMBER 848.05 SHEET 3 OF 3 FOR ALL RAMP NOTES

**CONTRACT STANDARDS AND DEVELOPMENT UNIT**
Office 919-707-6950 FAX 919-250-4119

# CURB RAMPS

Parallel Ramps

ORIGINAL BY: J.S. HOWERTON DATE: 7/7/11
MODIFIED BY: DATE:
CHECKED BY: DATE:
FILE SPEC.: stds/2012CurbRamp/CurbRampDetails.dgn

5/14/99

22-MAR-2012 15:07
S:\Contracts\Contracts\Special Details\jhowerton\Standard Drawings\2012 Standard Drawings\2012 Curb Ramp Special Details\Curb Ramp Details.dgn
jhowerton AT CSD237501

| PROJECT REFERENCE NO. | SHEET NO. |
|---|---|
| W-5813G | 2F |

PAY LIMITS FOR CURB RAMP

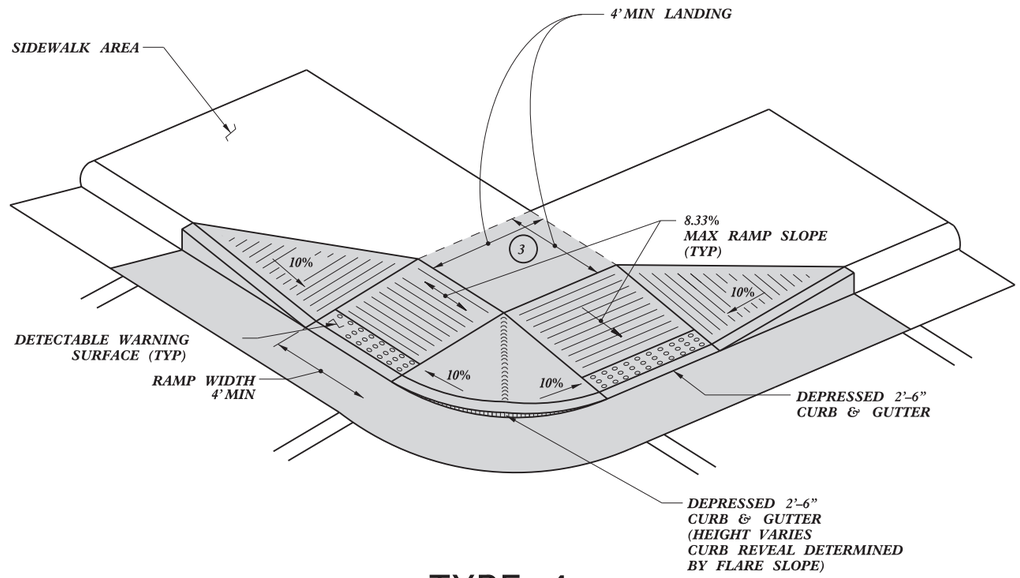


TYPE 4

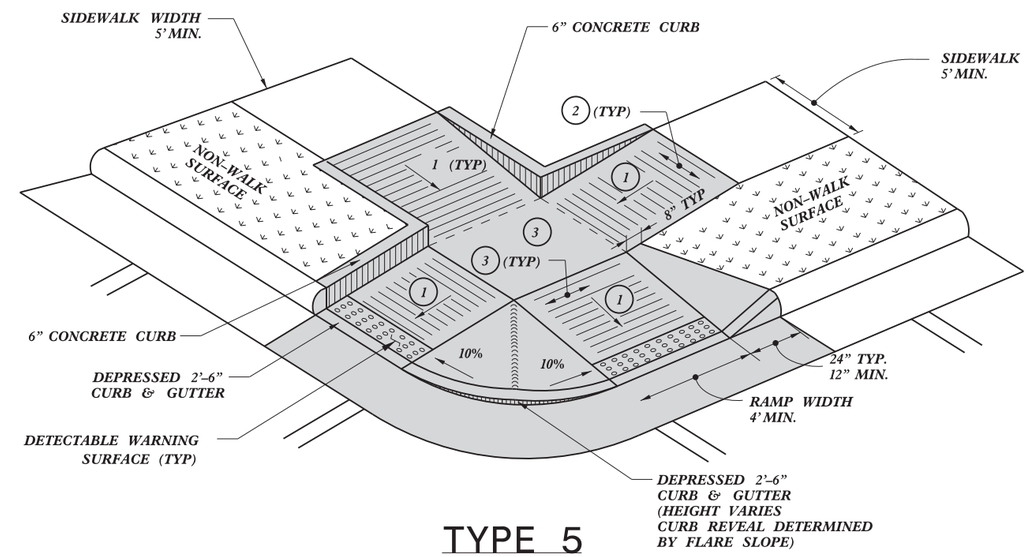


TYPE 5

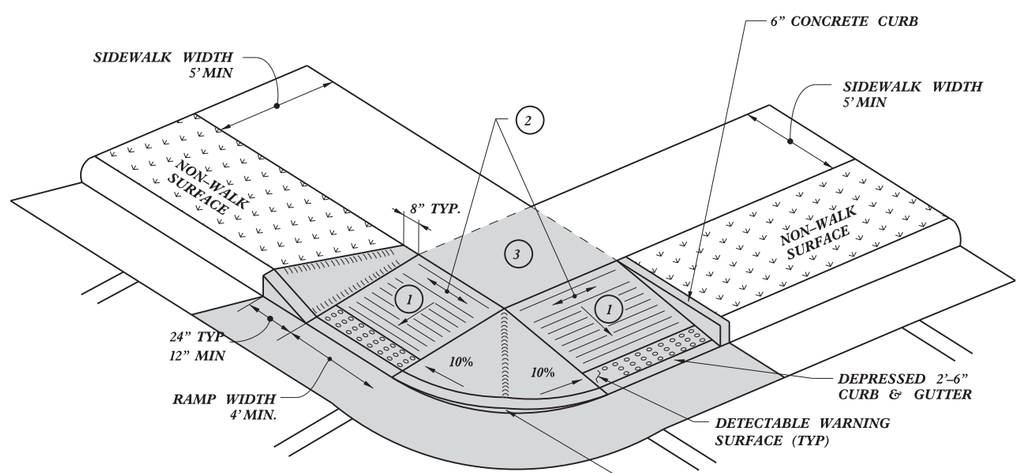


TYPE 4A

1. 8.33% (12:1) MAX RAMP SLOPE
2. CROSS SLOPE: 2.00%
3. CURB RAMPS REQUIRE A (4'-0") MINIMUM LANDING WITH A MAXIMUM CROSS SLOPE AND LONGITUDINAL SLOPE OF 2.00% WHERE PEDESTRIANS PERFORM TURNING MANEUVERS. SLOPE TO DRAIN TO CURB.

REFER TO ROADWAY STANDARD DRAWING NUMBER 848.05 SHEET 3 OF 3 FOR ALL RAMP NOTES


CONTRACT STANDARDS AND DEVELOPMENT UNIT
Office 919-707-6950 FAX 919-250-4119


# CURB RAMPS

Shared Landing

ORIGINAL BY: J.S. HOWERTON DATE: 7/7/11
MODIFIED BY: DATE:
CHECKED BY: DATE:
FILE SPEC.: stds/2012CurbRamp/CurbRampDetails.dgn


5/14/99
22-MAR-2012 15:08
S:\Contracts\Special Details\jhowerton\Standard Drawings\2012 Standard Drawings\2012 Curb Ramp Special Details\Curb Ramp Details.dgn
jhowerton AT CS0237001

5/14/99

| PROJECT REFERENCE NO. | SHEET NO. |
|---|---|
| W-5813G | 2G |

PAY LIMITS FOR 1 CURB RAMP

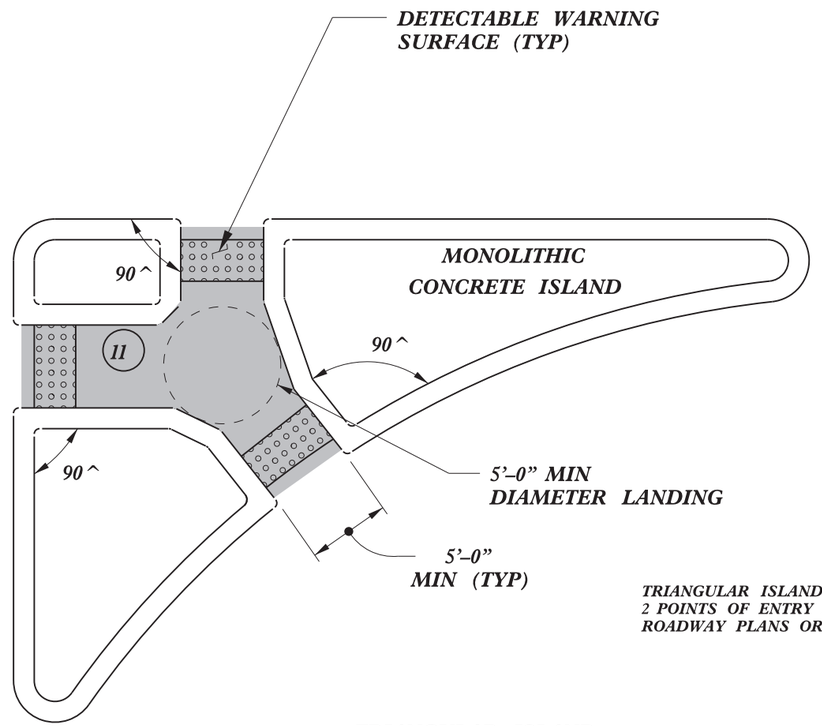


TRIANGULAR ISLANDS MAY BE CONSTRUCTED WITH ONLY 2 POINTS OF ENTRY AND EXIT AS SHOWN IN THE ROADWAY PLANS OR AS DIRECTED BY THE ENGINEER.

**TRIANGULAR ISLAND WITH CUT THROUGH**

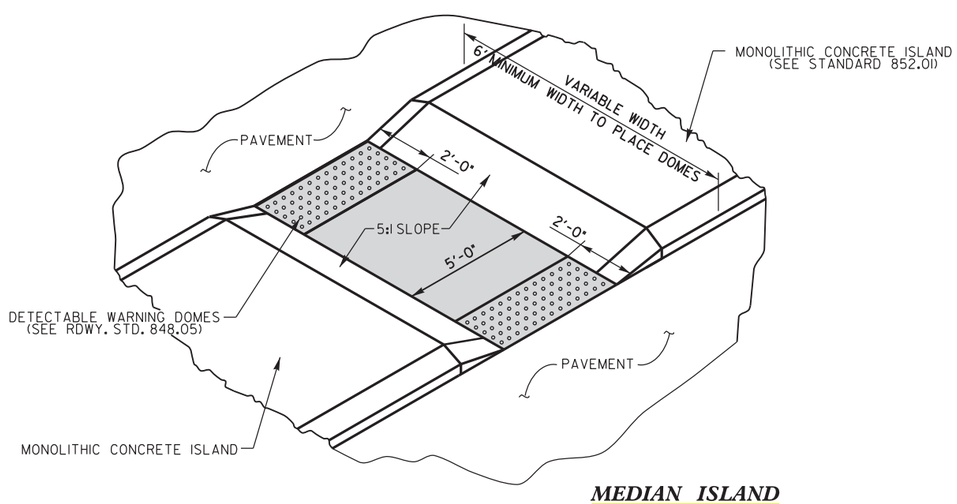


**MEDIAN ISLAND WITH CUT THROUGH**

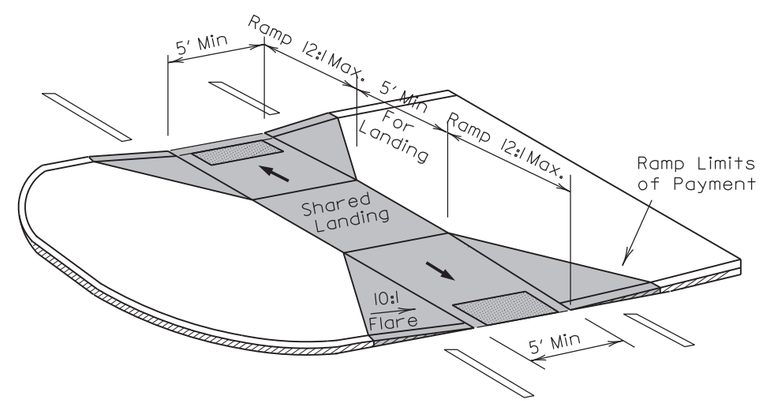


**MEDIAN ISLAND CURB RAMPS**


CONTRACT STANDARDS AND DEVELOPMENT UNIT
Office 919-707-6950 FAX 919-250-4119


# CURB RAMPS

Median or Turn Lane Islands

ORIGINAL BY: J.S. HOWERTON DATE: 7/7/11
MODIFIED BY: DATE:
CHECKED BY: DATE:
FILE SPEC.: stds/2012CurbRamp/CurbRampDetails.dgn

$$$$$SYSTIME$$$$
$$$$$$$$$$$$$$$$$$$$$$$$$$$$$$$$
$$$$USERNAME$$$$

| PROJECT REFERENCE NO. | SHEET NO. |
|---|---|
| W-5813G | 4 |
| R/W SHEET NO. | |
| ROADWAY DESIGN ENGINEER | HYDRAULICS ENGINEER |

INCOMPLETE PLANS
DO NOT USE FOR R/W ACQUISITION

DOCUMENT NOT CONSIDERED FINAL UNLESS ALL SIGNATURES COMPLETED

# SITE 1

## QUANTITIES

| | | |
|---|---|---|
| 1121000000-E | AGGREGATE BASE COURSE | 270 TON |
| 1693000000-E | ASPH PLT MIX PVMT REPAIR | 1 TON |
| 2549000000-E | 2'-6" CONC CURB & GUTTER | 350 LF |
| 2591000000-E | 4" CONC SIDEWALK | 180 SY |
| 2613000000-N | REM & REP CURB RAMPS | 2 EA |
| 2759000000-N | STEEL FLUME PLATE | 1 EA |
| 2845000000-N | ADJ METER OR VALVE BOXES | 1 EA |
| 3575000000-E | STEEL PIPE HANDRAIL | 60 LF |
| 4695000000-E | THERMOPLASTIC PAVEMENT MARKING LINES (8", 90 MILS) | 90 LF |
| 4710000000-E | THERMOPLASTIC PAVEMENT MARKING LINES (24", 120 MILS) | 20 LF |
| 6000000000-E | TEMP SILT FENCE | 100 LF |
| 6084000000-E | SEEDING AND MULCHING | 0.1 ACR |

## FINAL PAVEMENT MARKING SCHEDULE

| PAVEMENT MARKINGS | | PAVEMENT MARKINGS | |
|---|---|---|---|
| THERMOPLASTICS (24", 120 MILS) | | THERMOPLASTIC (8", 90 MILS) | |
| T2 | WHITE STOP | TQ | WHITE CROSSWALK LINE |

REVISIONS

8/17/99

22-MAR-2022 15:39
S:\MPE\Proj\Engineering\W-5813G\Roadway\Proj\W-5813G_ddc_psh_04.dgn
jscarver A1 DIVR-314828

| PROJECT REFERENCE NO. | SHEET NO. |
|---|---|
| W-5813G | 5 |
| R/W SHEET NO. | |
| ROADWAY DESIGN ENGINEER | HYDRAULICS ENGINEER |

INCOMPLETE PLANS
DO NOT USE FOR R/W ACQUISITION

DOCUMENT NOT CONSIDERED FINAL UNLESS ALL SIGNATURES COMPLETED

# SITE 2

## QUANTITIES

| | | |
|---|---|---|
| 1693000000-E | ASPH PLT MIX PVMT REPAIR | 3 TON |
| 2605000000-N | CONC CURB RAMPS | 1 EA |
| 2613000000-N | REM & REP CURB RAMPS | 5 EA |
| 2845000000-N | ADJ METER OR VALVE BOXES | 1 EA |
| 4695000000-E | THERMOPLASTIC PAVEMENT MARKING LINES (8", 90 MILS) | 450 LF |
| 4860000000-E | REMOVAL OF PAVEMENT MARKING LINES (8") | 450 LF |

## FINAL PAVEMENT MARKING SCHEDULE

PAVEMENT MARKINGS

THERMOPLASTIC (8", 90 MILS)

TQ WHITE CROSSWALK LINE

REVISIONS

8/17/99

22-MAR-2022 11:24
S:\Unit Engineering\W-5813G\Roadway\Proj\W-5813G_ddc_psh_05.dgn
$cover AT DIV13-314828

| PROJECT REFERENCE NO. | SHEET NO. |
|---|---|
| W-5813G | 6 |
| R/W SHEET NO. | |
| ROADWAY DESIGN ENGINEER | HYDRAULICS ENGINEER |

INCOMPLETE PLANS
DO NOT USE FOR R/W ACQUISITION

DOCUMENT NOT CONSIDERED FINAL UNLESS ALL SIGNATURES COMPLETED

## QUANTITIES

| | | |
|---|---|---|
| 1693000000-E | ASPH PLT MIX PVMT REPAIR | 2 TON |
| 2605000000-N | CONC CURB RAMPS | 1 EA |
| 2613000000-N | REM & REP CURB RAMPS | 3 EA |
| 2830000000-N | ADJ MANHOLES | 1 EA |
| 2845000000-N | ADJ METER OR VALVE BOXES | 1 EA |
| 4695000000-E | THERMOPLASTIC PAVEMENT MARKING LINES (8", 90 MILS) | 160 LF |
| 4710000000-E | THERMOPLASTIC PAVEMENT MARKING LINES (24", 120 MILS) | 220 LF |
| 4870000000-E | REMOVAL OF PAVEMENT MARKING LINES (24") | 220 LF |

## FINAL PAVEMENT MARKING SCHEDULE

| PAVEMENT MARKINGS | | PAVEMENT MARKINGS | |
|---|---|---|---|
| THERMOPLASTICS (24", 120 MILS) | | THERMOPLASTIC (8", 90 MILS) | |
| T2 | WHITE STOP BAR | TQ | WHITE CROSSWALK LINE |
| T3 | WHITE CROSSWALK LINE | | |

REVISIONS

8/17/99

22-MAR-2022 12:26
S:\DOT Projects\Engineering\W-5813G\Roadway\Proj\W-5813G_ddc_psh_06.dgn
wcarver AT DIV3-314828

| PROJECT REFERENCE NO. | SHEET NO. |
|---|---|
| W-5813G | Sig. 1.0 |

## PHASING DIAGRAM

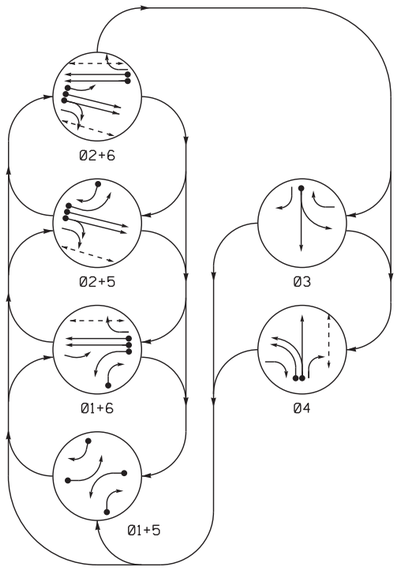


PHASING DIAGRAM DETECTION LEGEND

- DETECTED MOVEMENT
- UNDETECTED MOVEMENT (OVERLAP)
- UNSIGNALIZED MOVEMENT
- PEDESTRIAN MOVEMENT

## TABLE OF OPERATION

| SIGNAL FACE | PHASE 01+5 | 01+6 | 02+5 | 02+6 | 03 | 04 | FLASH |
|---|---|---|---|---|---|---|---|
| 11 | ← | ← | ~~R~~ | ~~R~~ | ~~R~~ | ~~R~~ | ~~R~~ |
| 21 | R | R | G | G | R | R | Y |
| 22 | R | R | G | G | R | R/← | Y |
| 31 | R | R | R | R | G | R | R |
| 32 | R/← | R | R/← | R | G | R | R |
| 41 | R | R | R | R | R | G | R |
| 42 | R/← | R/← | R | R | R | G | R |
| 51 | ← | E Y | ← | E Y | ~~R~~ | ~~R~~ | ~~Y~~ |
| 61 | R | G | R | G | R | R | Y |
| 62 | R | G | R | G | R/← | R | Y |
| P21,P22 | DW | DW | W | W | DW | DW | DRK |
| P41,P42 | DW | DW | DW | DW | DW | W | DRK |
| P61,P62 | DW | W | DW | W | DW | DW | DRK |
| Sign "E" | OFF | OFF | ON* | ON* | OFF | OFF | OFF |

* Illuminate during Phase 2 Ped

## SIGNAL FACE I.D.

All Heads L.E.D.

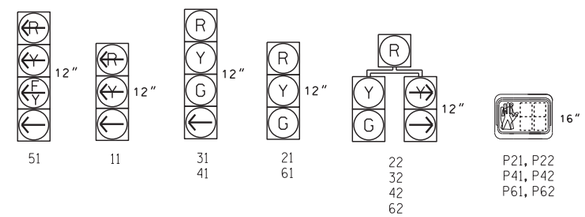


## OASIS 2070 LOOP & DETECTOR INSTALLATION CHART

| INDUCTIVE LOOPS | | | | | DETECTOR PROGRAMMING | | | | | | | |
|---|---|---|---|---|---|---|---|---|---|---|---|---|
| LOOP | SIZE (FT) | DISTANCE FROM STOPBAR (FT) | TURNS | NEW LOOP | PHASE | CALLING | EXTENSION | FULL TIME DELAY | STRETCH TIME | DELAY TIME | SYSTEM LOOP | NEW CARD |
| 1A | 6X40 | +5 | 2-4-2 | - | 1 | Y | Y | - | - | 3 | - | - |
| 1B | 6X60 | +5 | EXIST | - | 1 | Y | Y | - | - | 15 | - | - |
| 2A,2B | 6X6 | 70 | 3 | - | 2 | Y | Y | - | - | - | - | - |
| 3A | 6X40 | 0 | 2-4-2 | - | 3 | Y | Y | - | - | 3 | - | - |
| 4A | 6X60 | +5 | EXIST | - | 4 | Y | Y | - | - | 3 | - | - |
| 4B | 6X60 | +5 | EXIST | - | 4 | Y | Y | - | - | - | - | - |
| 5A | 6X40 | +5 | 2-4-2 | - | 5 | Y | Y | - | - | 15 | - | - |
| | | | | | 2 | Y | Y | - | - | - | - | - |
| 5B | 6X40 | +5 | 2-4-2 | - | 5 | Y | Y | - | - | 15 | - | - |
| 6A,6B | 6X6 | 70 | 4 | - | 6 | Y | Y | - | - | - | - | - |

## NOTES

6 Phase
Fully Actuated
Asheville Signal System

1. Refer to "Roadway Standard Drawings NCDOT" dated January 2018 and "Standard Specifications for Roads and Structures" dated January 2018.
2. Do not program signal for late night flashing operation unless otherwise directed by the Engineer.
3. Phase 1 and/or phase 5 may be lagged.
4. The order of phase 3 and phase 4 may be reversed.
5. Set all detector units to presence mode.
6. In the event of loop replacement, refer to the current ITS and Signals Design Manual and submit a Plan of Record to the Signal Design Section.
7. Omit "WALK" and flashing "DON'T WALK" with no pedestrian calls.
8. Program pedestrian heads to countdown the flashing "Don't Walk" time only.
9. Program phase 2 Ped for Advance Walk.
10. Illuminate Sign "E" during Phase 2+5 and 2+6 green.
11. Pavement markings are existing.
12. Maximum times shown in timing chart are for free-run operation only. Coordinated signal system timing values supersede these values.

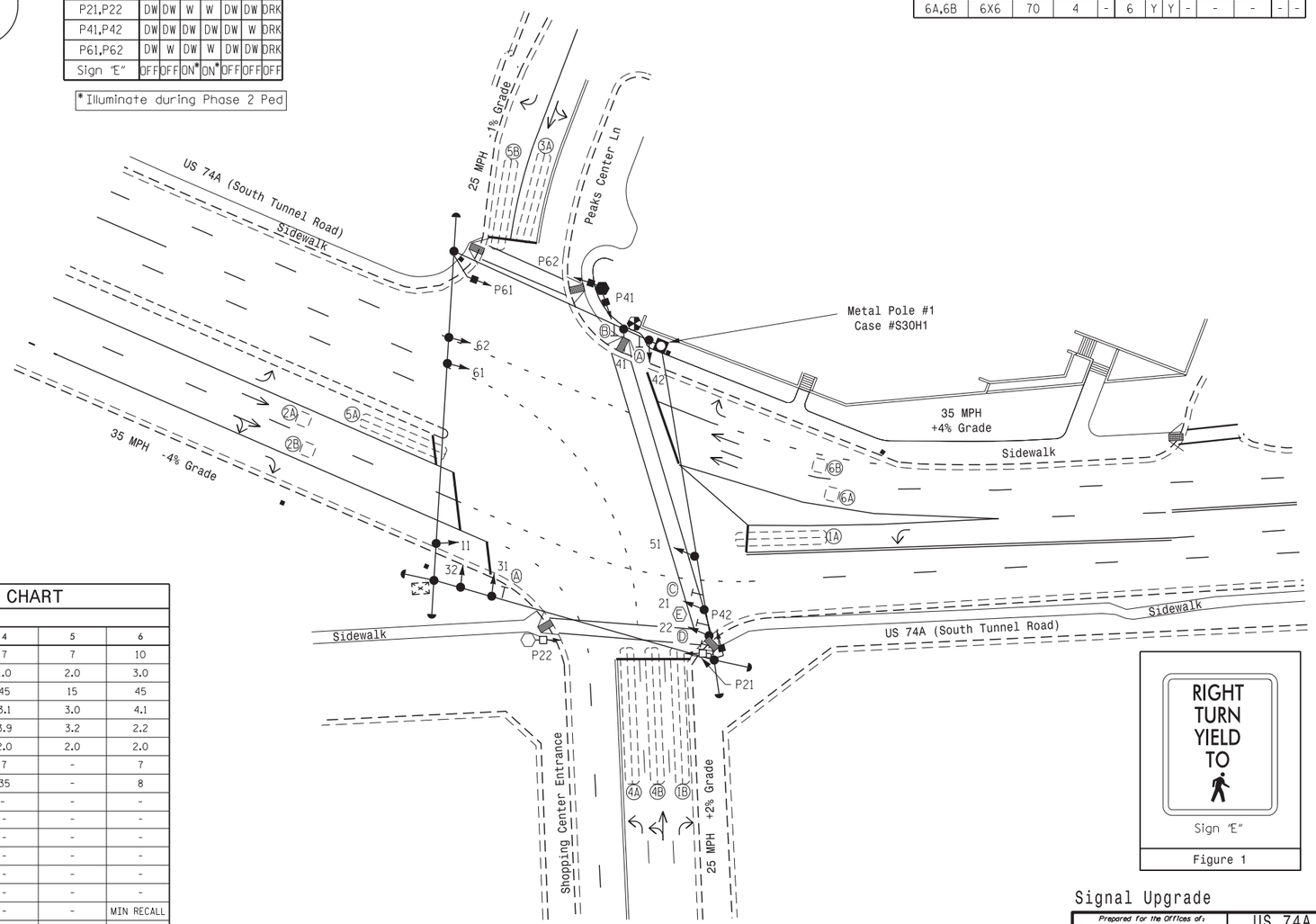





Sign "E"

Figure 1

## LEGEND

| PROPOSED | | EXISTING |
|---|---|---|
| | Traffic Signal Head | |
| | Modified Signal Head | N/A |
| | Sign | |
| | Pedestrian Signal Head With Push Button & Sign | |
| | Signal Pole with Guy | |
| | Signal Pole with Sidewalk Guy | |
| | Inductive Loop Detector | |
| | Controller & Cabinet | |
| | Junction Box | |
| | 2-in Underground Conduit | |
| N/A | Right of Way | |
| | Directional Arrow | |
| | Type II Signal Pedestal | |
| | Type I Pushbutton Post | |
| | Metal Strain Pole | |
| N/A | Wheelchair Ramp | |
| A | Combined Through and Left Arrow Sign (R3-6L) | A |
| B | Left Arrow "ONLY" Sign (R3-5L) | B |
| C | Combined Through and Right Arrow Sign (R3-6R) | C |
| D | Right Arrow "ONLY" Sign (R3-5R) | D |
| E | LED Blankout Sign (See Figure 1) | E |

## OASIS 2070 TIMING CHART

| FEATURE | PHASE 1 | 2 | 3 | 4 | 5 | 6 |
|---|---|---|---|---|---|---|
| Min Green 1 * | 7 | 10 | 7 | 7 | 7 | 10 |
| Extension 1 * | 2.0 | 3.0 | 2.0 | 1.0 | 2.0 | 3.0 |
| Max Green 1 * | 15 | 60 | 30 | 45 | 15 | 45 |
| Yellow Clearance | 3.0 | 4.1 | 3.2 | 3.1 | 3.0 | 4.1 |
| Red Clearance | 2.8 | 2.2 | 4.1 | 3.9 | 3.2 | 2.2 |
| Red Revert | 2.0 | 2.0 | 2.0 | 2.0 | 2.0 | 2.0 |
| Walk 1 * | - | 7 | - | 7 | - | 7 |
| Don't Walk 1 | - | 16 | - | 35 | - | 8 |
| Advance Walk | - | 5 | - | - | - | - |
| Seconds Per Actuation * | - | - | - | - | - | - |
| Max Variable Initial * | - | - | - | - | - | - |
| Time Before Reduction * | - | - | - | - | - | - |
| Time To Reduce * | - | - | - | - | - | - |
| Minimum Gap | - | - | - | - | - | - |
| Recall Mode | - | MIN RECALL | - | - | - | MIN RECALL |
| Vehicle Call Memory | - | YELLOW | - | - | - | YELLOW |
| Dual Entry | - | - | - | - | - | - |
| Simultaneous Gap | ON | ON | ON | ON | ON | ON |

* These values may be field adjusted. Do not adjust Min Green and Extension times for phases 2 and 6 lower than what is shown. Min Green for all other phases should not be lower than 4 seconds.

DOCUMENT NOT CONSIDERED FINAL UNLESS ALL SIGNATURES COMPLETED

Signal Upgrade

Prepared for the Offices of: Transportation Mobility and Safety Division, Signal Design Section, Traffic Engineering Branch, Division of Highways, State of North Carolina

750 N.Greenfield Pkwy,Garner,NC 27529

SCALE 0 30 1"=30'

# US 74A (South Tunnel Road) at Shopping Center Entrance/ Peaks Center Ln.

Division 13 Buncombe County Asheville

| | | | |
|---|---|---|---|
| PLAN DATE: | August 2021 | REVIEWED BY: | T.J. Williams |
| PREPARED BY: | EM Minshew | REVIEWED BY: | |

| REVISIONS | INIT. | DATE |
|---|---|---|
| | | |

SEAL: NORTH CAROLINA PROFESSIONAL SEAL 024393 ENGINEER TIMOTHY J. WILLIAMS

DocuSigned by: T. J. Williams 97AD792EBE934CA... 8/31/2021 DATE

SIG. INVENTORY NO. 13-0398

31-AUG-2021 07:16
S:\TMS\SW\TS Signals\Signal Design Section\Western Region\Div-13\13-0398\2021-07\13039B_sig_dsn_2021mmdd.dgn
eminshew

| PROJECT REFERENCE NO. | SHEET NO. |
|---|---|
| W-5813G | Sig. 1.1 |

## EDI MODEL 2018ECLip-NC CONFLICT MONITOR PROGRAMMING DETAIL

*(remove jumpers and set switches as shown)*

REMOVE DIODE JUMPERS 1-5, 1-6, 1-11, 1-15, 2-5, 2-6, 2-11, 2-13, 2-15, 4-14, 5-11, 5-13, 6-11, 6-13, 6-15, 11-13, 11-15 and 13-15.

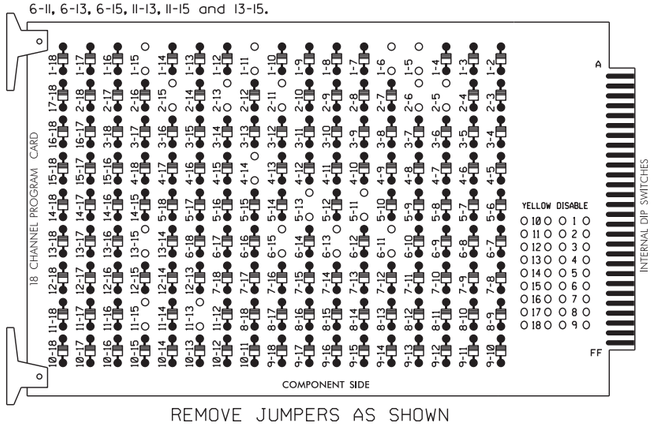


REMOVE JUMPERS AS SHOWN

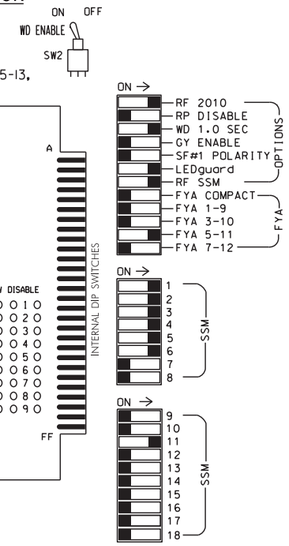


NOTES:

1. Card is provided with all diode jumpers in place. Removal of any jumper allows its channels to run concurrently.
2. Ensure jumpers SEL2-SEL5 and SEL9 are present on the monitor board.
3. Ensure that Red Enable is active at all times during normal operation.
4. Integrate monitor with Ethernet network in cabinet.

## NOTES

1. To prevent "flash-conflict" problems, insert red flash program blocks for all unused vehicle load switches in the output file. The installer shall verify that signal heads flash in accordance with the Signal Plans.
2. Enable Simultaneous Gap-Out for all Phases.
3. Program phases 2 and 6 for Startup In Green.
4. Program phases 4 and 6 for Startup Ped Call.
5. Program phases 2 and 6 for Yellow Flash.
6. The cabinet and controller are part of the Asheville Signal System.

## EQUIPMENT INFORMATION

CONTROLLER.....2070E
CABINET .....332
SOFTWARE .....ECONOLITE OASIS
CABINET MOUNT.....BASE
OUTPUT FILE POSITIONS...18 WITH AUX. OUTPUT FILE
LOAD SWITCHES USED.....S1,S2,S3,S4,S5,S6,S7,S8, S9,AUX S4
PHASES USED.....1,2,2 PED,3,4,4PED,5,6, 6PED
OVERLAP "A".....NOT USED
OVERLAP "B".....NOT USED
OVERLAP "C".....5+6
OVERLAP "D".....NOT USED

## SIGNAL HEAD HOOK-UP CHART

| LOAD SWITCH NO. | S1 | | S2 | S3 | S4 | | | S5 | | | S6 | S7 | | S8 | S9 | S10 | S11 | S12 | AUX S1 | AUX S2 | AUX S3 | AUX S4 | AUX S5 | AUX S6 |
|---|---|---|---|---|---|---|---|---|---|---|---|---|---|---|---|---|---|---|---|---|---|---|---|---|
| CMU CHANNEL NO. | 1 | | 2 | 13 | 3 | | | 4 | | | 14 | 5 | | 6 | 15 | 7 | 8 | 16 | 9 | 10 | 17 | 11 | 12 | 18 |
| PHASE | 1 | | 2 | 2 PED | 3 | | | 4 | | | 4 PED | 5 | | 6 | 6 PED | 7 | 8 | 8 PED | OLA | OLB | SPARE | OLC | OLD | SPARE |
| SIGNAL HEAD NO. | 11 | 42 | 21,22 | P21, P22 | 31 | 32 | 62 | 41 | 42 | 22 | P41, P42 | 51★ | 32 | 61,62 | P61, P62 | NU | NU | NU | NU | NU | NU | 51★ | NU | NU |
| RED | | | 128 | | 116 | 116 | | 101 | 101 | | | | ✳ | 134 | | | | | | | | | | |
| YELLOW | | | 129 | | 117 | 117 | | 102 | 102 | | | | | 135 | | | | | | | | | | |
| GREEN | | | 130 | | 118 | 118 | | 103 | 103 | | | | | 136 | | | | | | | | | | |
| RED ARROW | 125 | | | | | | | | | | | | | | | | | | | | | A114 | | |
| YELLOW ARROW | 126 | 126 | | | | | 117 | | | 102 | | | 132 | | | | | | | | | A115 | | |
| FLASHING YELLOW ARROW | | | | | | | | | | | | | | | | | | | | | | A116 | | |
| GREEN ARROW | 127 | 127 | | | 118 | | 118 | 103 | | 103 | | 133 | 133 | | | | | | | | | | | |
| ✋ | | | | 113 | | | | | | | 104 | | | | 119 | | | | | | | | | |
| PED YELLOW | | | | ✳✳ 114 | | | | | | | | | | | | | | | | | | | | |
| 🚶 | | | | 115 | | | | | | | 106 | | | | 121 | | | | | | | | | |

NU = Not Used

✳ Denotes install load resistor. See load resistor installation detail this sheet.

✳✳ A Blankout Sign is wired to S3-Y, see wiring detail and programming detail sheet 2.

★ See pictorial of head wiring in detail this sheet.

## FYA SIGNAL WIRING DETAIL

*(wire signal head as shown)*

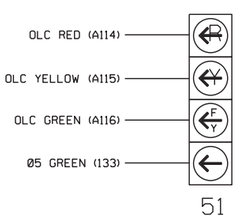


NOTE

The sequence display for signal head 51 requires special logic programming. See sheet 2 for programming instructions.

## INPUT FILE POSITION LAYOUT

*(front view)*

| | | 1 | 2 | 3 | 4 | 5 | 6 | 7 | 8 | 9 | 10 | 11 | 12 | 13 | 14 |
|---|---|---|---|---|---|---|---|---|---|---|---|---|---|---|---|
| FILE "I" | U | SLOT EMPTY | Ø1 1A | Ø2 2A,2B | WIRE INPUT ⊗ | SLOT EMPTY | Ø3 3A | Ø4 4A | SLOT EMPTY | SLOT EMPTY | SLOT EMPTY | SLOT EMPTY | Ø2 PED DC ISOLATOR | Ø6 PED DC ISOLATOR | FS DC ISOLATOR |
| | L | | Ø1 1B | NOT USED | | | NOT USED | Ø4 4B | | | | | Ø4 PED DC ISOLATOR | NOT USED | ST DC ISOLATOR |
| FILE "J" | U | Ø5 5A | Ø5 5B | Ø6 6A,6B | SLOT EMPTY | SLOT EMPTY | SLOT EMPTY | SLOT EMPTY | SLOT EMPTY | SLOT EMPTY | SLOT EMPTY | SLOT EMPTY | SLOT EMPTY | SLOT EMPTY | SLOT EMPTY |
| | L | NOT USED | NOT USED | NOT USED | | | | | | | | | | | |

EX.: 1A, 2A, ETC. = LOOP NO.'S

⊗ Wired Input - Do not populate slot with detector card

FS = FLASH SENSE
ST = STOP TIME

## INPUT FILE CONNECTION & PROGRAMMING CHART

| LOOP NO. | LOOP TERMINAL | INPUT FILE POS. | PIN NO. | INPUT ASSIGNMENT NO. | DETECTOR NO. | NEMA PHASE | CALL | EXTEND | FULL TIME DELAY | STRETCH TIME | DELAY TIME |
|---|---|---|---|---|---|---|---|---|---|---|---|
| 1A | TB2-5,6 | I2U | 39 | 1 | 2 | 1 | Y | Y | | | 3 |
| 1B | TB2-7,8 | I2L | 43 | 5 | 12 | 1 | Y | Y | | | 15 |
| 2A,2B | TB2-9,10 | I3U | 63 | 25 | 32 | 2 | Y | Y | | | |
| 3A | TB4-9,10 | I6U | 41 | 3 | 4 | 3 | Y | Y | | | 3 |
| 4A | TB6-1,2 | I7U | 65 | 27 | 34 | 4 | Y | Y | | | 3 |
| 4B | TB6-3,4 | I7L | 78 | 40 | 44 | 4 | Y | Y | | | |
| 5A[1] | TB3-1,2 | J1U | 55 | 17 | 5 | 5 | Y | Y | | | 15 |
| | - | I4U | 47 | 9 | 22 | 2 | Y | Y | | | |
| 5B | TB3-5,6 | J2U | 40 | 2 | 6 | 5 | Y | Y | | | 15 |
| 6A,6B | TB3-9,10 | J3U | 64 | 26 | 36 | 6 | Y | Y | | | |
| PED PUSH BUTTONS | | | | | | | | | | | |
| P21,P22 | TB8-4,6 | I12U | 67 | 29 | PED 2 | 2 PED | | | | | |
| P41,P42 | TB8-5,6 | I12L | 69 | 31 | PED 4 | 4 PED | | | | | |
| P61,P62 | TB8-7,9 | I13U | 68 | 30 | PED 6 | 6 PED | | | | | |

NOTE:
INSTALL DC ISOLATORS IN INPUT FILE SLOTS I12 AND I13.

[1]Add jumper from J1-W to I4-W, on rear of input file.

INPUT FILE POSITION LEGEND: J2L
FILE J
SLOT 2
LOWER

THIS ELECTRICAL DETAIL IS FOR
THE SIGNAL DESIGN: 13-0398
DESIGNED: August 2021
SEALED: 8/31/2021
REVISED:

## LOAD RESISTOR INSTALLATION DETAIL

*(install resistor as shown below)*

| ACCEPTABLE VALUES | |
|---|---|
| VALUE (ohms) | WATTAGE |
| 1.5K - 1.9K | 25W (min) |
| 2.0K - 3.0K | 10W (min) |

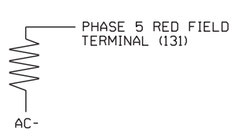


Electrical Detail - Sheet 1 of 2

DOCUMENT NOT CONSIDERED FINAL UNLESS ALL SIGNATURES COMPLETED

ELECTRICAL AND PROGRAMMING DETAILS FOR:

US 74A (South Tunnel Road) at Shopping Center Entrance/ Peaks Center Ln.

Division 13 Buncombe County Asheville

| PLAN DATE: August 2021 | REVIEWED BY: T. Joyce |
|---|---|
| PREPARED BY: C. Strickland | REVIEWED BY: |

| REVISIONS | INIT. | DATE |
|---|---|---|
| | | |

Prepared for the Offices of:
Transportation Mobility and Safety Division
Signal Management Section
750 N.Greenfield Pkwy, Garner, NC 27529

SEAL
NORTH CAROLINA PROFESSIONAL SEAL 031001 ENGINEER TODD JOYCE

DocuSigned by: D. Todd Joyce A90CADFDB0D4241D... 8/31/2021 DATE

SIG. INVENTORY NO. 13-0398

31-AUG-2021 09:56
S:\TMSA\DK\TS Signals\Workgroups\Sig Mon\Projects From Signal Design\Active Projects\Strickland\13039b_sm.ele.xxx.dgn
cstrickland

| PROJECT REFERENCE NO. | SHEET NO. |
|---|---|
| W-5813G | Sig. 1.2 |

## LOGICAL I/O PROCESSOR PROGRAMMING DETAIL TO PRODUCE SPECIAL FYA-PPLT SIGNAL SEQUENCE

*(program controller as shown below)*

1. FROM MAIN MENU PRESS '2' (PHASE CONTROL), THEN '1' (PHASE CONTROL FUNCTIONS). SCROLL TO THE BOTTOM OF THE MENU AND ENABLE ACT LOGIC COMMANDS 1, 2, AND 3.
2. FROM MAIN MENU PRESS '6' (OUTPUTS), THEN '3' (LOGICAL I/O PROCESSOR).

```
LOGICAL I/O COMMAND #1  (+/-COMMAND#)
IF  ACTIVE PHASE        #5  IS ON
AND RED CLEAR ON PHASE #5  IS ON

SCROLL DOWN

THEN:
SET OUTPUT  ASSIGNMENT #42 ON
SET OUTPUT  ASSIGNMENT #43 OFF
```

NOTE: LOGIC FOR PHASE 5 RED CLEAR WHEN TRANSITIONING FROM PHASE 5 TO PHASE 6 (HEAD 51).

PRESS '+'

```
LOGICAL I/O COMMAND #2  (+/-COMMAND#)
IF  ACTIVE PHASE        #5  IS ON

SCROLL DOWN

THEN:
SET OUTPUT  ASSIGNMENT #44 OFF
```

NOTE: LOGIC FOR SWITCHING FLASHING YELLOW ARROW "OFF" DURING PHASE 5 (HEAD 51).

PRESS '+'

```
LOGICAL I/O COMMAND #3  (+/-COMMAND#)
IF  YELLOW ON PHASE     #5  IS ON

SCROLL DOWN

THEN:
SET OUTPUT  ASSIGNMENT #43 ON
```

NOTE: LOGIC FOR YELLOW ARROW CLEARANCE FROM PHASE 5 (HEAD 51).

LOGIC I/O PROCESSOR PROGRAMMING COMPLETE

***OUTPUT REFERENCE SCHEDULE***

OUTPUT 42 = Overlap C Red
OUTPUT 43 = Overlap C Yellow
OUTPUT 44 = Overlap C Green

## LOGICAL I/O PROCESSOR PROGRAMMING DETAIL FOR BLANKOUT SIGN OPERATION

*(program controller as shown below)*

1. From Main Menu press '2' (Phase Control), then '1' (Phase Control Functions). Scroll to the bottom of the menu and enable Act Logic Commands 4 and 5.
2. From Main Menu press '6' (Outputs), then '3' (Logical I/O Processor).
3. The programming shown below is necessary for the operation of Blankout Sign E.

```
LOGICAL I/O COMMAND #4  (+/-COMMAND#)
IF  GREEN ON PHASE      #2  IS ON

SCROLL DOWN

THEN:
SET OUTPUT  ASSIGNMENT #33  ON
```

NOTE: BLANKOUT SIGN "ON".

PRESS '+'

```
LOGICAL I/O COMMAND #5  (+/-COMMAND#)
IF  GREEN ON PHASE      #2  IS OFF

SCROLL DOWN

THEN:
SET OUTPUT  ASSIGNMENT #33  OFF
```

NOTE: BLANKOUT SIGN "OFF".

LOGIC I/O PROCESSOR PROGRAMMING COMPLETE

***OUTPUT REFERENCE SCHEDULE***

OUTPUT 33 = Phase 2 PED Yellow

## BLANKOUT SIGN "E" WIRING DETAIL

*(wire sign as shown)*

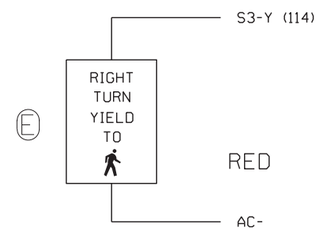


## NOTES

1. IF TERMINAL 114 HAS A CONFLICT MONITOR WIRE CONNECTED, REMOVE, TAPE AND LABEL WIRE.

## OVERLAP PROGRAMMING DETAIL

*(program controller as shown below)*

FROM MAIN MENU PRESS '8' (OVERLAPS), THEN '1' (VEHICLE OVERLAP SETTINGS).

PRESS '+' TWICE

```
PAGE 1: VEHICLE OVERLAP 'C' SETTINGS
 PHASE:          |123456789101112131415 16
VEH OVL PARENTS: |    XX
VEH OVL NOT VEH: |
VEH OVL NOT PED: |
VEH OVL GRN EXT: |
STARTUP COLOR: _ RED  _ YELLOW  _ GREEN
FLASH COLORS:  _ RED  _ YELLOW  X GREEN
SELECT VEHICLE OVERLAP OPTIONS:   (Y/N)
FLASH YELLOW IN CONTROLLER FLASH?...Y
GREEN EXTENSION (0-255 SEC)........0
YELLOW CLEAR (0=PARENT,3-25.5 SEC)..0.0
RED CLEAR (0=PARENT,0.1-25.5 SEC)...0.0
OUTPUT AS PHASE # (0=NONE, 1-16)....0
```

NOTICE GREEN FLASH

OVERLAP PROGRAMMING COMPLETE

## COUNTDOWN PEDESTRIAN SIGNAL OPERATION

Countdown Ped Signals are required to display timing only during Ped Clearance Interval. Consult Ped Signal Module user's manual for instructions on selecting this feature.

## ADVANCE WALK NOTE

*(program controller as shown below)*

From Main Menu press '2' (Phase Control), then '1' (Phase Control Functions). Program phase 2 for 'Advanced Walk'. Make sure the Walk Advance Time shown on the Signal Design plans are programmed in the 'Phase Timing' menu.

THIS ELECTRICAL DETAIL IS FOR
THE SIGNAL DESIGN: 13-0398
DESIGNED: August 2021
SEALED: 8/31/2021
REVISED:

Electrical Detail - Sheet 2 of 2

**DOCUMENT NOT CONSIDERED FINAL UNLESS ALL SIGNATURES COMPLETED**

ELECTRICAL AND PROGRAMMING DETAILS FOR:

Prepared for the Offices of:

Mobility and Safety Division, ITS & Signals Management Section, Transportation, STATE OF NORTH CAROLINA, DEPARTMENT OF TRANSPORTATION

750 N.Greenfield Pkwy,Garner,NC 27529

US 74A (South Tunnel Road)
at
Shopping Center Entrance/
Peaks Center Ln.

Division 13 Buncombe County Asheville

| | | | |
|---|---|---|---|
| PLAN DATE: August 2021 | | REVIEWED BY: | T. Joyce |
| PREPARED BY: C. Strickland | | REVIEWED BY: | |

| REVISIONS | INIT. | DATE |
|---|---|---|
| | | |
| | | |
| | | |

SEAL

NORTH CAROLINA PROFESSIONAL SEAL 031001 ENGINEER D. TODD JOYCE

DocuSigned by: D. Todd Joyce A90CADFDBD4241D... 8/31/2021 DATE

SIG. INVENTORY NO. 13-0398

31-AUG-2021 11:37
S:\TMS\CAD\ITS\Signals\Workgroups\Sig Mgmt\Projects From Signal Design\Active Projects\Strickland\13398_smalls_xxx.dgn
cestrickland

| PROJECT REFERENCE NO. | SHEET NO. |
|---|---|
| W-5813G | Sig.1.0 |

## PHASING DIAGRAM

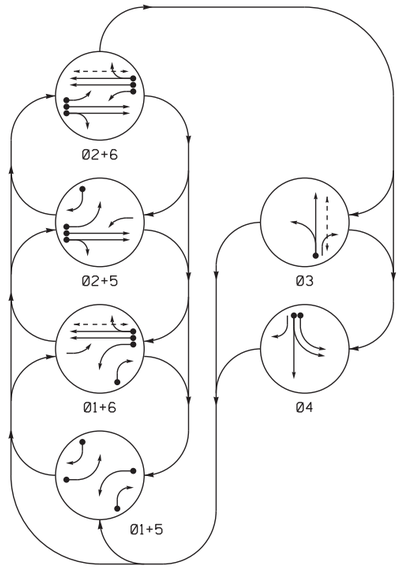


PHASING DIAGRAM DETECTION LEGEND

- DETECTED MOVEMENT
- UNDETECTED MOVEMENT (OVERLAP)
- UNSIGNALIZED MOVEMENT
- PEDESTRIAN MOVEMENT

## TABLE OF OPERATION

| SIGNAL FACE | PHASE 01+5 | 01+6 | 02+5 | 02+6 | 03 | 04 | FLASH |
|---|---|---|---|---|---|---|---|
| 11 | ← | ← | F Y | F Y | ~~R~~ | ~~R~~ | ~~Y~~ |
| 21, 22 | R | R | G | G | R | R | Y |
| 31 | R | R | R | R | G | R | R |
| 32 | R/ | R/ | R | R | G | R | R |
| 41 | R | R | R | R | R | G | R |
| 42 | R/ | R | R/ | R | R | G | R |
| 51 | ← | F Y | ← | F Y | ~~R~~ | ~~R~~ | ~~Y~~ |
| 61, 62 | R | G | R | G | R | R | Y |
| P31, P32 | DW | DW | DW | DW | W | DW | DRK |
| P61, P62 | DW | W | DW | W | DW | DW | DRK |

## SIGNAL FACE I.D.

All Heads L.E.D.

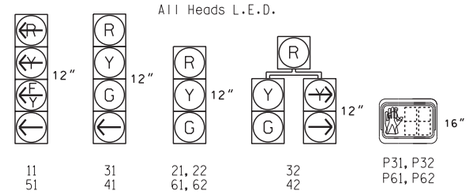


## OASIS 2070 LOOP & DETECTOR INSTALLATION CHART

| INDUCTIVE LOOPS | | | | | DETECTOR PROGRAMMING | | | | | | |
|---|---|---|---|---|---|---|---|---|---|---|---|
| LOOP | SIZE (FT) | DISTANCE FROM STOPBAR (FT) | TURNS | NEW LOOP | PHASE | CALLING | EXTENSION | FULL TIME DELAY | STRETCH TIME | DELAY TIME | SYSTEM LOOP | NEW CARD |
| 1A | 6X40 | 0 | 2-4-2 | - | 1 | Y | Y | - | - | 15 | - | - |
| | | | | | 6 | Y | Y | - | - | - | - | - |
| 1B | 6X40 | 0 | 2-4-2 | - | 1 | Y | Y | - | - | 15 | - | - |
| 2A, 2B | 6X6 | 90 | EXIST | - | 2 | Y | Y | - | - | - | - | - |
| 3A | 6X40 | 0 | 2-4-2 | - | 3 | Y | Y | - | - | 3 | - | - |
| 4A | 6X40 | +15 | 2-4-2 | - | 4 | Y | Y | - | - | 3 | - | - |
| 4B | 6X40 | +10 | 2-4-2 | - | 4 | Y | Y | - | - | - | - | - |
| 5A | 6X60 | +10 | 2-4-2 | - | 5 | Y | Y | - | - | 15 | - | - |
| | | | | | 2 | Y | Y | - | - | - | - | - |
| 5B | 6X40 | 0 | 2-4-2 | - | 5 | Y | Y | - | - | 15 | - | - |
| 6A, 6B | 6X6 | 90 | EXIST | - | 6 | Y | Y | - | - | - | - | - |

6 Phase
Fully Actuated
Asheville Signal System

## NOTES

1. Refer to "Roadway Standard Drawings NCDOT" dated January 2018 and "Standard Specifications for Roads and Structures" dated January 2018.
2. Phase 1 and/or phase 5 may be lagged.
3. The order of phase 3 and phase 4 may be reversed.
4. Set all detector units to presence mode.
5. In the event of loop replacement, refer to the current ITS and Signals Design Manual and submit a Plan of Record to the Signal Design Section.
6. Omit "WALK" and flashing "DON'T WALK" with no pedestrian calls for Ped phase 3.
7. Program pedestrian heads to countdown the flashing "Don't Walk" time only.
8. Maximum times shown in timing chart are for free-run operation only. Coordinated signal system timing values supersede these values.

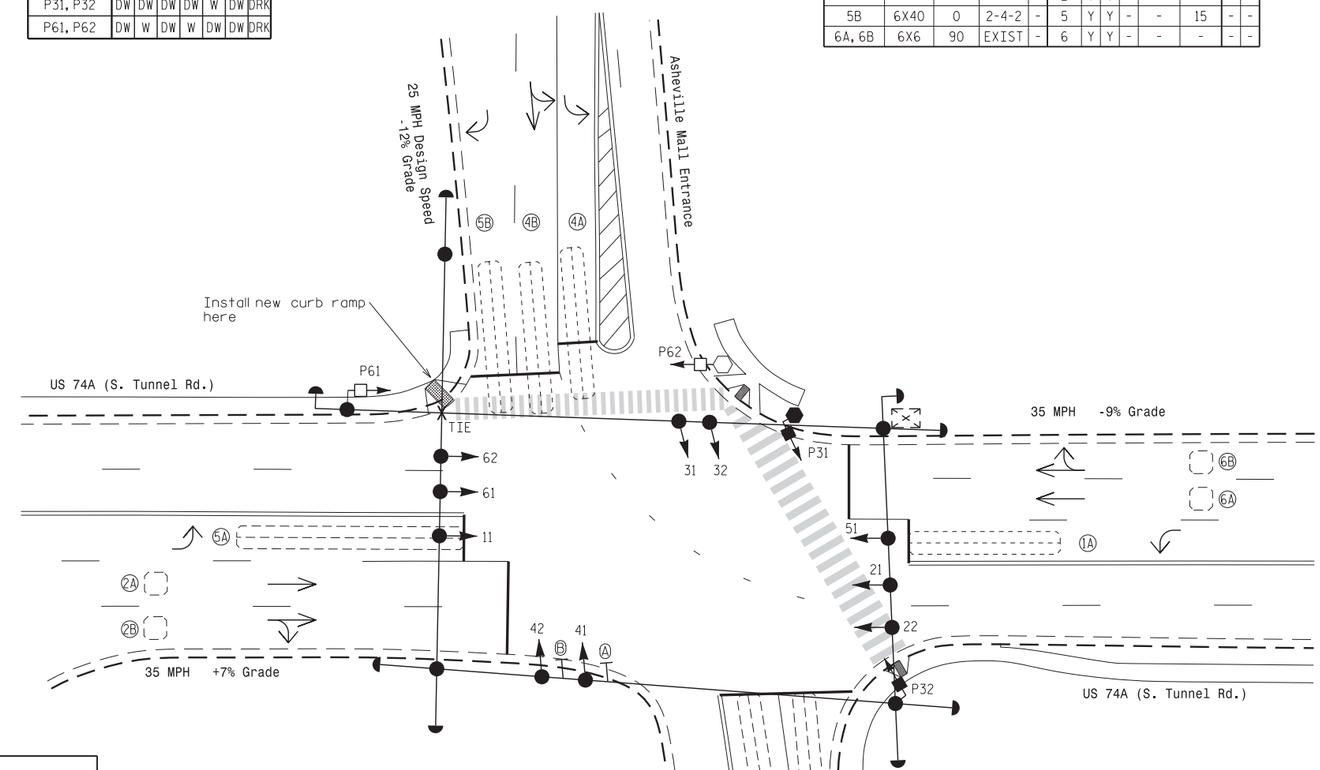


## LEGEND

| PROPOSED | | EXISTING |
|---|---|---|
| | Traffic Signal Head | |
| | Modified Signal Head | N/A |
| | Sign | |
| | Pedestrian Signal Head With Push Button & Sign | |
| | Signal Pole with Guy | |
| | Signal Pole with Sidewalk Guy | |
| | Inductive Loop Detector | |
| | Controller & Cabinet | |
| | Junction Box | |
| | 2-in Underground Conduit | |
| N/A | Right of Way | |
| | Directional Arrow | |
| | Type II Signal Pedestal | |
| N/A | Curb Ramp | |
| A | Left Arrow "ONLY" Sign (R3-5L) | A |
| B | Combined Through and Left Arrow Sign (R3-6L) | B |

## OASIS 2070 TIMING CHART

| FEATURE | PHASE 1 | 2 | 3 | 4 | 5 | 6 |
|---|---|---|---|---|---|---|
| Min Green 1 * | 7 | 10 | 7 | 7 | 7 | 10 |
| Extension 1 | 2.0 | 3.0 | 2.0 | 1.0 | 1.0 | 3.0 |
| Max Green 1 * | 15 | 60 | 25 | 25 | 15 | 60 |
| Yellow Clearance | 3.3 | 4.6 | 3.3 | 4.0 | 3.0 | 4.6 |
| Red Clearance | 2.3 | 2.0 | 2.8 | 2.8 | 1.9 | 2.0 |
| Red Revert | 2.0 | 2.0 | 2.0 | 2.0 | 2.0 | 2.0 |
| Walk 1 * | - | - | 7 | - | - | 7 |
| Don't Walk 1 | - | - | 18 | - | - | 17 |
| Seconds Per Actuation * | - | - | - | - | - | - |
| Max Variable Initial * | - | - | - | - | - | - |
| Time Before Reduction * | - | - | - | - | - | - |
| Time To Reduce * | - | - | - | - | - | - |
| Minimum Gap | - | - | - | - | - | - |
| Recall Mode | - | MIN RECALL | - | - | - | MIN/PED RECALL |
| Vehicle Call Memory | - | YELLOW | - | - | - | YELLOW |
| Dual Entry | - | - | - | - | - | - |
| Simultaneous Gap | ON | ON | ON | ON | ON | ON |

* These values may be field adjusted. Do not adjust Min Green and Extension times for phases 2 and 6 lower than what is shown. Min Green for all other phases should not be lower than 4 seconds.

## STOP BAR LOCATIONS

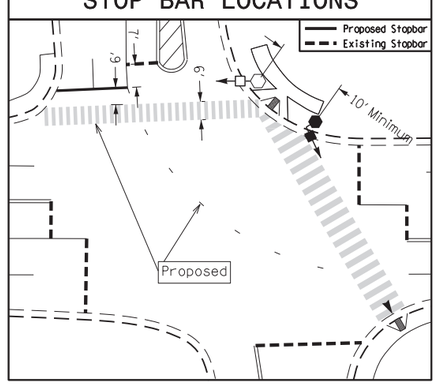


Signal Upgrade

DOCUMENT NOT CONSIDERED FINAL UNLESS ALL SIGNATURES COMPLETED

Prepared In the Offices of:
Transportation Mobility and Safety Division
STATE OF NORTH CAROLINA DEPARTMENT OF TRANSPORTATION
Signal Design Section
750 N.Greenfield Pkwy,Garner,NC 27529

US 74A (S. Tunnel Rd.)
at
Asheville Mall Entrance/
Shopping Center Entrance

Division 13 Buncombe County Asheville

PLAN DATE: July 2021 REVIEWED BY: T.J. Williams
PREPARED BY: X. Han REVIEWED BY:

SCALE 0 20 1"=20'

| REVISIONS | INIT. | DATE |
|---|---|---|
| | | |

SEAL
NORTH CAROLINA PROFESSIONAL SEAL 024393 ENGINEER TIMOTHY J. WILLIAMS

DocuSigned by: T. J. Williams 97AD792E8E934CA...
8/3/2021
SIG. INVENTORY NO. 13-0417
DATE

03-AUG-2021 13:44
S:\TIS\62\WITS\Signals\Signal Design Section\Western Region\Div-13\13-0417\2021-07\13017_sig_dsn_2021nmad.dgn
xghan

| PROJECT REFERENCE NO. | SHEET NO. |
|---|---|
| W-5813G | Sig. 1.1 |

# EDI MODEL 2018ECLip-NC CONFLICT MONITOR PROGRAMMING DETAIL

*(remove jumpers and set switches as shown)*

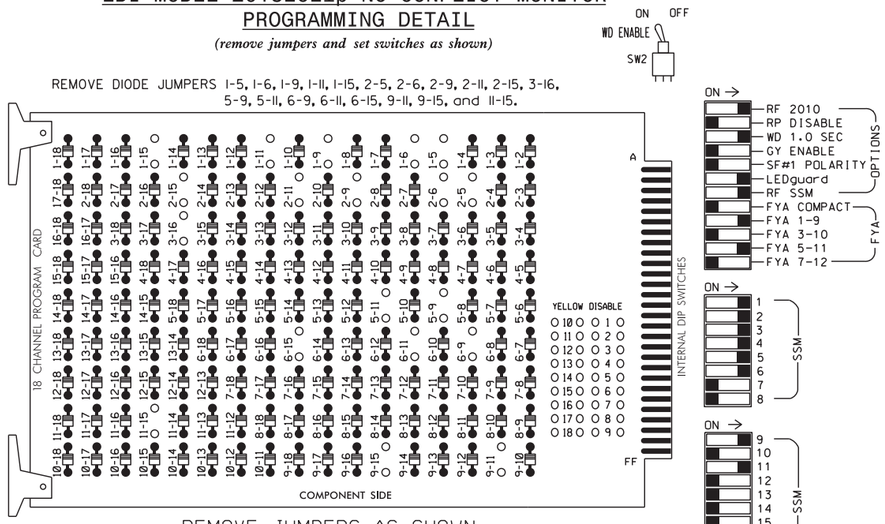


■ = DENOTES POSITION OF SWITCH

NOTES:

1. Card is provided with all diode jumpers in place. Removal of any jumper allows its channels to run concurrently.
2. Ensure jumpers SEL2-SEL5 and SEL9 are present on the monitor board.
3. Ensure that Red Enable is active at all times during normal operation.
4. Integrate monitor with Ethernet network in cabinet.

## NOTES

1. To prevent "flash-conflict" problems, insert red flash program blocks for all unused vehicle load switches in the output file. The installer shall verify that signal heads flash in accordance with the Signal Plans.
2. Enable Simultaneous Gap-Out for all phases.
3. Program phases 2 and 6 for Startup In Green.
4. Program phase 3 and 6 for 'Startup Ped Call'.
5. Program phases 2 and 6 for Yellow Flash, and overlap 1 as Wag Overlaps.
6. The cabinet and controller are part of the Asheville Signal System.

## EQUIPMENT INFORMATION

CONTROLLER.....2070E
CABINET.....332 W/ AUX
SOFTWARE.....ECONOLITE OASIS
CABINET MOUNT.....BASE
OUTPUT FILE POSITIONS...18 WITH AUX. OUTPUT FILE
LOAD SWITCHES USED.....S1,S2,S4,S5,S7,S8,S9,S12,
AUX S1,AUX S4
PHASES USED.....1,2,3,3PED,4,5,6,6PED
OVERLAP "A".....1+2
OVERLAP "B".....NOT USED
OVERLAP "C".....5+6
OVERLAP "D".....NOT USED

## SIGNAL HEAD HOOK-UP CHART

| LOAD SWITCH NO. | S1 | | S2 | S3 | S4 | | S5 | | S6 | S7 | | S8 | S9 | S10 | S11 | S12 | AUX S1 | AUX S2 | AUX S3 | AUX S4 | AUX S5 | AUX S6 |
|---|---|---|---|---|---|---|---|---|---|---|---|---|---|---|---|---|---|---|---|---|---|---|
| CMU CHANNEL NO. | 1 | | 2 | 13 | 3 | | 4 | | 14 | 5 | | 6 | 15 | 7 | 8 | 16 | 9 | 10 | 17 | 11 | 12 | 18 |
| PHASE | 1 | | 2 | 2 PED | 3 | | 4 | | 4 PED | 5 | | 6 | 6 PED | 7 | 8 | 8 PED | OLA | OLB | SPARE | OLC | OLD | SPARE |
| SIGNAL HEAD NO. | 11★ | 32 | 21,22 | NU | 31 | 32 | 41 | 42 | NU | 42 | 51★ | 61,62 | P61, P62 | NU | NU | P31, P32 | 11★ | NU | NU | 51★ | NU | NU |
| RED | | ✳ | 128 | | 116 | 116 | 101 | 101 | | ✳ | | 134 | | | | | | | | | | |
| YELLOW | | | 129 | | 117 | 117 | 102 | 102 | | | | 135 | | | | | | | | | | |
| GREEN | | | 130 | | 118 | 118 | 103 | 103 | | | | 136 | | | | | | | | | | |
| RED ARROW | | | | | | | | | | | | | | | | | A121 | | | A114 | | |
| YELLOW ARROW | | 126 | | | | | | | | 132 | | | | | | | A122 | | | A115 | | |
| FLASHING YELLOW ARROW | | | | | | | | | | | | | | | | | A123 | | | A116 | | |
| GREEN ARROW | 127 | 127 | | | 118 | | 103 | | | 133 | 133 | | | | | | | | | | | |
| ✋ | | | | | | | | | | | | | 119 | | | 110 | | | | | | |
| 🚶 | | | | | | | | | | | | | 121 | | | 112 | | | | | | |

NU = Not Used

✳ Denotes install load resistor. See load resistor installation detail this sheet.

★ See pictorial of head wiring in detail this sheet.

## FYA SIGNAL WIRING DETAIL

*(wire signal heads as shown)*

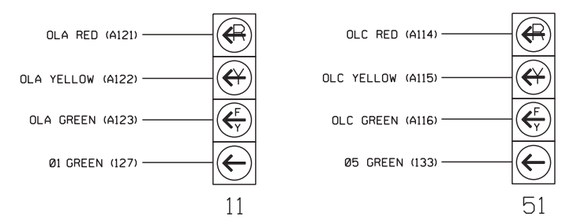


NOTE

The sequence display for these signals requires special logic programming. See sheet 2 for programming instructions.

## INPUT FILE POSITION LAYOUT

*(front view)*

| | | 1 | 2 | 3 | 4 | 5 | 6 | 7 | 8 | 9 | 10 | 11 | 12 | 13 | 14 |
|---|---|---|---|---|---|---|---|---|---|---|---|---|---|---|---|
| FILE "I" | U | Ø1 1A | Ø1 1B | Ø2 2A,2B | WIRED INPUT ⊗ | Ø3 3A | Ø4 4A | SLOT EMPTY | SLOT EMPTY | SLOT EMPTY | SLOT EMPTY | SLOT EMPTY | SLOT EMPTY | Ø6 PED DC ISOLATOR | FS DC ISOLATOR |
| | L | NOT USED | NOT USED | NOT USED | | NOT USED | Ø4 4B | | | | | | | Ø3 PED DC ISOLATOR | ST DC ISOLATOR |
| FILE "J" | U | Ø5 5A | Ø5 5B | Ø6 6A,6B | WIRED INPUT ⊗ | SLOT EMPTY | SLOT EMPTY | SLOT EMPTY | SLOT EMPTY | SLOT EMPTY | SLOT EMPTY | SLOT EMPTY | SLOT EMPTY | SLOT EMPTY | SLOT EMPTY |
| | L | NOT USED | NOT USED | NOT USED | | | | | | | | | | | |

EX.: 1A, 2A, ETC. = LOOP NO.'S

FS = FLASH SENSE
ST = STOP TIME

⊗ Wired Input - Do not populate slot with detector card

## INPUT FILE CONNECTION & PROGRAMMING CHART

| LOOP NO. | LOOP TERMINAL | INPUT FILE POS. | PIN NO. | INPUT ASSIGNMENT NO. | DETECTOR NO. | NEMA PHASE | CALL | EXTEND | FULL TIME DELAY | STRETCH TIME | DELAY TIME |
|---|---|---|---|---|---|---|---|---|---|---|---|
| 1A[1] | TB2-1,2 | I1U | 56 | 18 | 1 | 1 | Y | Y | | | 15 |
| | - | J4U | 48 | 10 | 26 | 6 | Y | Y | | | |
| 1B | TB2-5,6 | I2U | 39 | 1 | 2 | 1 | Y | Y | | | 15 |
| 2A,2B | TB2-9,10 | I3U | 63 | 25 | 32 | 2 | Y | Y | | | |
| 3A | TB4-5,6 | I5U | 58 | 20 | 3 | 3 | Y | Y | | | 3 |
| 4A | TB4-9,10 | I6U | 41 | 3 | 4 | 4 | Y | Y | | | 3 |
| 4B | TB4-11,12 | I6L | 45 | 7 | 14 | 4 | Y | Y | | | |
| 5A[2] | TB3-1,2 | J1U | 55 | 17 | 5 | 5 | Y | Y | | | 15 |
| | - | I4U | 47 | 9 | 22 | 2 | Y | Y | | | |
| 5B | TB3-5,6 | J2U | 40 | 2 | 6 | 5 | Y | Y | | | 15 |
| 6A,6B | TB3-9,10 | J3U | 64 | 26 | 36 | 6 | Y | Y | | | |
| PED PUSH BUTTONS | | | | | | | | | | | |
| P31,P32 | TB8-8,9 | I13L | 70 | 32 | PED 8 | 3 PED | | | | | |

NOTE:
INSTALL DC ISOLATOR IN INPUT FILE SLOT I13.

[1] Add jumper from I1-W to J4-W, on rear of input file.

[2] Add jumper from J1-W to I4-W, on rear of input file.

INPUT FILE POSITION LEGEND: J2L
FILE J
SLOT 2
LOWER

## LOAD RESISTOR INSTALLATION DETAIL

*(install resistors as shown below)*

ACCEPTABLE VALUES

| VALUE (ohms) | WATTAGE |
|---|---|
| 1.5K - 1.9K | 25W (min) |
| 2.0K - 3.0K | 10W (min) |

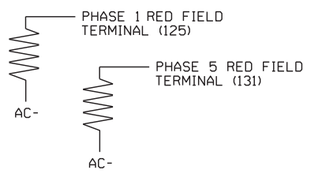


## COUNTDOWN PEDESTRIAN SIGNAL OPERATION

Countdown Ped Signals are required to display timing only during Ped Clearance Interval. Consult Ped Signal Module user's manual for instructions on selecting this feature.

THIS ELECTRICAL DETAIL IS FOR
THE SIGNAL DESIGN: 13-0417
DESIGNED: July 2021
SEALED: 8/3/2021
REVISED: N/A

Electrical Detail - Sheet 1 of 2

DOCUMENT NOT CONSIDERED FINAL UNLESS ALL SIGNATURES COMPLETED

Prepared in the Offices of:
Transportation Mobility and Safety Division
STATE OF NORTH CAROLINA DEPARTMENT OF TRANSPORTATION
ITS & Signal Management Section
750 N.Greenfield Pkwy,Garner,NC 27529

US 74A (S. Tunnel Rd.)
at
Asheville Mall Entrance/
Shopping Center Entrance

Division 13 Buncombe County Asheville

PLAN DATE: August 2021 REVIEWED BY:
PREPARED BY: S. Armstrong REVIEWED BY:

| REVISIONS | INIT. | DATE |
|---|---|---|
| | | |

SEAL
NORTH CAROLINA PROFESSIONAL SEAL 036833 ENGINEER RYAN W. HOUGH

DocuSigned by: Ryan W. Hough 8/4/2021
4903D2EFAA2854C3... DATE

SIG. INVENTORY NO. 13-0417

08-AUG-2021 10:00
S:\TITSSIGN\ITS\Signals\Workgroups\Sig Mgmt\Projects From Signal Design\Active Projects\Armstrong\DIV Projects\13-0417 div project\13017_sm_ele_xxx.dgn
sarmstrong

| PROJECT REFERENCE NO. | SHEET NO. |
|---|---|
| W-5813G | Sig. 1.2 |

## LOGICAL I/O PROCESSOR PROGRAMMING DETAIL
## TO PRODUCE SPECIAL FYA-PPLT SIGNAL SEQUENCE

*(program controller as shown below)*

1. FROM MAIN MENU PRESS '2' (PHASE CONTROL), THEN '1' (PHASE CONTROL FUNCTIONS). SCROLL TO THE BOTTOM OF THE MENU AND ENABLE ACT LOGIC COMMANDS 1, 2, 3, 4, 5 AND 6.

2. FROM MAIN MENU PRESS '6' (OUTPUTS), THEN '3' (LOGICAL I/O PROCESSOR).

```
LOGICAL I/O COMMAND #1  (+/-COMMAND#)
IF  ACTIVE PHASE        #1  IS ON
AND RED CLEAR ON PHASE  #1  IS ON

SCROLL DOWN

THEN:
SET OUTPUT  ASSIGNMENT #50 ON
SET OUTPUT  ASSIGNMENT #51 OFF
```

NOTE: LOGIC FOR PHASE 1 RED CLEAR WHEN TRANSITIONING FROM PHASE 1 TO PHASE 2 (HEAD 11).

PRESS '+'

```
LOGICAL I/O COMMAND #2  (+/-COMMAND#)
IF  ACTIVE PHASE        #1  IS ON

SCROLL DOWN

THEN:
SET OUTPUT  ASSIGNMENT #52 OFF
```

NOTE: LOGIC FOR SWITCHING FLASHING YELLOW ARROW "OFF" DURING PHASE 1 (HEAD 11).

PRESS '+'

```
LOGICAL I/O COMMAND #3  (+/-COMMAND#)
IF  YELLOW ON PHASE     #1  IS ON

SCROLL DOWN

THEN:
SET OUTPUT  ASSIGNMENT #51 ON
```

NOTE: LOGIC FOR YELLOW ARROW CLEARANCE FROM PHASE 1 (HEAD 11).

PRESS '+'

```
LOGICAL I/O COMMAND #4  (+/-COMMAND#)
IF  ACTIVE PHASE        #5  IS ON
AND RED CLEAR ON PHASE  #5  IS ON

SCROLL DOWN

THEN:
SET OUTPUT  ASSIGNMENT #42 ON
SET OUTPUT  ASSIGNMENT #43 OFF
```

NOTE: LOGIC FOR PHASE 5 RED CLEAR WHEN TRANSITIONING FROM PHASE 5 TO PHASE 6 (HEAD 51).

PRESS '+'

```
LOGICAL I/O COMMAND #5  (+/-COMMAND#)
IF  ACTIVE PHASE        #5  IS ON

SCROLL DOWN

THEN:
SET OUTPUT  ASSIGNMENT #44 OFF
```

NOTE: LOGIC FOR SWITCHING FLASHING YELLOW ARROW "OFF" DURING PHASE 5 (HEAD 51).

PRESS '+'

```
LOGICAL I/O COMMAND #6  (+/-COMMAND#)
IF  YELLOW ON PHASE     #5  IS ON

SCROLL DOWN

THEN:
SET OUTPUT  ASSIGNMENT #43 ON
```

NOTE: LOGIC FOR YELLOW ARROW CLEARANCE FROM PHASE 5 (HEAD 51).

LOGIC I/O PROCESSOR PROGRAMMING COMPLETE

### *OUTPUT REFERENCE SCHEDULE*

OUTPUT 42 = Overlap C Red
OUTPUT 43 = Overlap C Yellow
OUTPUT 44 = Overlap C Green
OUTPUT 50 = Overlap A Red
OUTPUT 51 = Overlap A Yellow
OUTPUT 52 = Overlap A Green

THIS ELECTRICAL DETAIL IS FOR
THE SIGNAL DESIGN: 13-0417
DESIGNED: July 2021
SEALED: 8/3/2021
REVISED: N/A

## OVERLAP PROGRAMMING DETAIL

*(program controller as shown below)*

FROM MAIN MENU PRESS '8' (OVERLAPS), THEN '1' (VEHICLE OVERLAP SETTINGS).

```
PAGE 1: VEHICLE OVERLAP 'A' SETTINGS
PHASE:              ¦123456789101112131415 16
VEH OVL PARENTS:¦XX
VEH OVL NOT VEH:¦
VEH OVL NOT PED:¦
VEH OVL GRN EXT:¦
STARTUP COLOR: _ RED  _ YELLOW  _ GREEN
FLASH COLORS:  _ RED  _ YELLOW  X GREEN
SELECT VEHICLE OVERLAP OPTIONS:   (Y/N)
FLASH YELLOW IN CONTROLLER FLASH?...Y
GREEN EXTENSION (0-255 SEC).........0
YELLOW CLEAR (0=PARENT,3-25.5 SEC)..0.0
RED CLEAR (0=PARENT,0.1-25.5 SEC)...0.0
OUTPUT AS PHASE # (0=NONE, 1-16)....0
```

← NOTICE GREEN FLASH

PRESS '+' TWICE

```
PAGE 1: VEHICLE OVERLAP 'C' SETTINGS
PHASE:              ¦123456789101112131415 16
VEH OVL PARENTS:¦    XX
VEH OVL NOT VEH:¦
VEH OVL NOT PED:¦
VEH OVL GRN EXT:¦
STARTUP COLOR: _ RED  _ YELLOW  _ GREEN
FLASH COLORS:  _ RED  _ YELLOW  X GREEN
SELECT VEHICLE OVERLAP OPTIONS:   (Y/N)
FLASH YELLOW IN CONTROLLER FLASH?...Y
GREEN EXTENSION (0-255 SEC).........0
YELLOW CLEAR (0=PARENT,3-25.5 SEC)..0.0
RED CLEAR (0=PARENT,0.1-25.5 SEC)...0.0
OUTPUT AS PHASE # (0=NONE, 1-16)....0
```

← NOTICE GREEN FLASH

OVERLAP PROGRAMMING COMPLETE

## PED 3 PROGRAMMING DETAIL

*(program controller as shown below)*

**CHANGING OUTPUT ASSIGNMENTS**

1. FROM MAIN MENU SELECT '6' (OUTPUTS), THEN '1' (OUTPUT ASSIGNMENTS)
2. ENTER 17 (PHASE 8 DW) FOR OUTPUT ASSIGNMENT #.
3. SCROLL DOWN TO 'PEDESTRIAN PHASE' AND ENTER 'Y' REGARDLESS OF DEFAULT PROGRAMMING
4. ENTER '3' FOR 'SELECT PEDESTRIAN PHASE'. NO CHANGE NEEDED FOR 'SELECT COLOR'
5. BACKUP TO 'OUTPUT ASSIGNMENTS AND SETTINGS MENU:' BY PRESSING THE 'ESC' BUTTON ON KEYBOARD.
6. SELECT '1' (OUTPUT ASSIGNMENTS)
7. ENTER 18 (PHASE 8 W) FOR OUTPUT ASSIGNMENT #.
8. REPEAT STEPS # 3 AND # 4.

**CHANGING INPUT ASSIGNMENTS**

1. FROM MAIN MENU SELECT '7' (DETECTORS), THEN '2' (PEDESTRIAN DETECTOR ASSIGNMENTS)
2. CYCLE TO PED DETECTOR #8 BY REPEATEDLY DEPRESSING '+' KEY
3. MODIFY PHASE ASSIGNED TO PED DETECTOR # 8 FROM PHASE 8 TO PHASE 3

PROGRAMMING COMPLETE

Electrical Detail - Sheet 2 of 2

**DOCUMENT NOT CONSIDERED FINAL UNLESS ALL SIGNATURES COMPLETED**

ELECTRICAL AND PROGRAMMING DETAILS FOR:

US 74A (S. Tunnel Rd.)
at
Asheville Mall Entrance/
Shopping Center Entrance

Division 13 Buncombe County Asheville

| | | | |
|---|---|---|---|
| PLAN DATE: August 2021 | REVIEWED BY: | | |
| PREPARED BY: S. Armstrong | REVIEWED BY: | | |
| REVISIONS | | INIT. | DATE |

Prepared in the Offices of:
Transportation Mobility and Safety Division
ITS & Signals Management Section
STATE OF NORTH CAROLINA DEPARTMENT OF TRANSPORTATION
750 N.Greenfield Pkwy,Garner,NC 27529

SEAL
NORTH CAROLINA PROFESSIONAL SEAL 036833 ENGINEER RYAN W. HOUGH

DocuSigned by: Ryan W. Hough 8/4/2021
430320FAA2854C3... DATE

SIG. INVENTORY NO. 13-0417

04-AUG-2021 10:00
w:\3041\wf_w-5813g_sig_1.2_ed_sig_elec_detail_sheet_2_of_2.dgn
armstrong